January 28, 2013

Technical Report

Context Model Library for C2M2L-1

Interim Report - EMI Susceptibility via Cables

Prepared for BAE Systems

C2M2L

Subcontract 338724

Technical Point of Contact:
John G. Kraemer PE
Rockwell Collins, Inc.
400 Collins Rd. NE, MS 106-183
Cedar Rapids, IA 52498
Telephone: (319) 295-4681
jgkraeme@rockwellcollins.com

Business Point of Contact:
Ms. Kelly M. Scott
Rockwell Collins, Inc.
400 Collins Rd. NE, MS 121-200
Cedar Rapids, IA 52498
Telephone: (319) 295-7323
kmscott@rockwellcollins.com

Distribution Statement C: Distribution Authorized to U.S Government Agencies and their contractors. Other requests for this document shall be referred to the DARPA Technical Information Office.

Rockwell Collins, Inc.
400 Collins Rd. NE
Cedar Rapids, Iowa 52498

© Copyright 2013 Rockwell Collins Inc.
All rights reserved.

TABLE OF CONTENTS

1. INTRODUCTION 7

1.1 SCOPE 9
1.2 REFERENCE DOCUMENTS 9
1.3 UNITS OF MEASURE 10
1.4 LIST OF ACRONYMS 10
1.5 DEFINITIONS 11

2. THE ELECTROMAGNETIC ENVIRONMENTS 14

2.1 SEMANTICS 14
2.2 GROUND VEHICLE SYSTEM ELECTROMAGNETIC ENVIRONMENTS 15
2.2.1 Radiated Radio Frequency (RF) Electromagnetic Environment (RF EME) 15
2.2.2 Electromagnetic Pulse (EMP) 15
2.2.3 Lightning Effects 15
2.2.4 High Power Microwave (HPM) 16
2.2.5 Electrostatic Discharge 16
2.2.6 Internally Generated Electromagnetic Energy 16
2.3 ELECTROMAGNETIC ENVIRONMENT FOR GROUND VEHICLE SUBSYSTEMS AND EQUIPMENT 17
2.3.1 Conducted Susceptibility - RF – CS114 Environment Model 19
2.3.2 Conducted Susceptibility – Bulk Cable Injection, Impulse Excitation – CS115 Environment Model 24
2.3.3 Conducted Susceptibility – Damped Sinusoidal Transients – CS116 Environment Model 28
2.3.4 Radiated Susceptibility- Electric Field - RS103 Environment Model 32
2.3.5 Radiated Susceptibility - Transient Electromagnetic Field - RS105 Environment Model 33

3. CABLE/CONNECTOR ASSEMBLY MODELING METHODOLOGY 35

3.1 MODEL ENTITY BLOCKS 35
3.2 GROUNDS AND GROUNDING 41
3.2.1 CST Studio Suite Electromagnetic Effects Simulator Overview 41
3.2.2 Grounding within CST Studio Suite 41
3.3 CABLE HARNESS DEFINITION 45
3.3.1 Ground Plane 45
3.3.2 Nodes 45
3.3.3 Segments, Traces, and Routes 45
3.3.4 Cables and Cable Groups 46
3.3.5 Cable Bundles 46
3.3.6 Cable Harness 46
3.3.7 Shielded Cable Bundles 46
3.3.8 Signals and Signal Terminals 46
3.3.9 Connectors, Plug-ins, Pins, and Junctions 47
3.3.10 Cable Block I/O 47
3.4 CABLE SHIELD TRANSFER IMPEDANCE 48

4. MULTI-BRANCH CABLE EXAMPLE 54

4.1 FOCUS ON EMI COMPLIANCE 54
4.2 EXAMPLE COMPLIANCE TEST SETUP SPECIFICS 57
4.3 DETERMINATION OF SIGNIFICANT FEATURES 57
4.3 ENTITY BLOCKS 60
4.4 MODEL INPUT AND ANALYSIS – EXPLANATION BY EXAMPLE 66
4.4.1 I/O and Signaling Schematic with Common Ground 66
4.4.2 I/O and Signaling Schematic with Target Grounding System 67
4.4.3 Cable Harness Model Build 68
4.4.4 Combine Cable and Interface Circuit Entity models 69

4.4.5 Addition of EMI Environment Injection *69*
4.4.6 Build Models for 3-D Connector, Backshell, and Transition Entity Structures *70*
4.4.7 Complete Co-Simulation Integration and Checkout *71*
4.4.8 Apply Environment, Probe Victim Circuits and Analyze Results *72*
4.4.9. Analysis of the Results *74*
4.4.10. Implement Needed Design Changes, Re-Run Simulation *75*

5. SUMMARY AND CONCLUSIONS **77**

APPENDIX A: STATEMENT OF WORK **122**

TABLE OF FIGURES

Figure 2.3-1. Flow-down of System Level Electromagnetic Threats to Equipment, Subsystems and Cables ... 18
Figure 2.3-2. Origin of Baseline MIL-STD-461F RS103 Requirement Applicable to Ground System Equipment ... 19
Figure 2.3.1-1. CS114 Current Limits ... 21
Figure 2.3.1-3. MIL-STD-461F Power Line Impedance Stabilization Network (LISN) ... 22
Figure 2.3.1-4. CS114 Environment Model ... 23
Figure 2.3.2-1. CS115 Pulse Waveform ... 25
Figure 2.3.2-2. Compliant Injected CS115 Pulse Waveform into 100 Ohm Loop ... 26
Figure 2.3.2-3. CS115 Environment Model ... 27
Figure 2.3.3-1. CS116 Waveform ... 30
Figure 2.3.3-2. CS116 Ip Limit ... 30
Figure 2.3.3-3. CS116 Environment Model ... 31
Figure 2.3.5-1. RS105 Waveform ... 34
Figure 2.3.5-2. RS105 Setup Example for a Subsystem ... 34
Figure 3.1-1. Model Entity Blocks ... 36
Figure 3.2.2-1. Grounding Scheme #1 in Co-simulation Environment for Simple 3-Conductor Cable above Ground Plane ... 43
Figure 3.2.2-2. Grounding Scheme #2 in Co-simulation Environment for Simple 3-Conductor Cable above Ground Plane ... 44
Figure 3.4-1. Terminology for Braided Shields ... 50
Figure 3.4-2. Screenshot Showing Uses of Kley's Model in Cable Studio ... 51
Figure 3.4-3. Cable with Combination Foil and Braid Shield ... 52
Figure 3.4-4. Transfer Impedance of Shields on Various Belden Data Cables Containing Foil ... 52
Figure 3.4-5. Transfer Impedance of Shields on Popular Coax Cables Utilizing Braid-only Shields ... 53
Figure 4-1. EMI Test Setup for CS Injection On to Cable 1 at LRU 1 ... 56
Figure 4.2-1. Cable Harness Build Information ... 58
Figure 4.3-1. I/O Circuits Schematic with Probe Locations ... 62
Figure 4.3-2. Entity Blocks and Interconnection in Co-simulation Framework ... 63
Figure 4.4.1-1. I/O and Signaling Schematic with Common Ground - CST Design Studio ... 78
Figure 4.4.1-2. I/O and Signaling Schematic with Common Ground – Results - Gain in Desired Direction ... 79
Figure 4.4.1-3. I/O and Signaling Schematic with Common Ground – Results - Gain in Reverse Direction ... 80
Figure 4.4.2-1. I/O and Signaling Schematic with Target System Floating Grounds - CST Design Studio ... 81
Figure 4.4.2-2. I/O and Signaling Schematic with Target System Floating Ground – Results - Gain in Desired Direction ... 82
Figure 4.4.2-3. I/O and Signaling Schematic with Target System Floating Ground – Results - Gain in Reverse Direction ... 83
Figure 4.4.3-1. Cable Harness Layout and Build – CST Cable Studio ... 84
Figure 4.4.3-2. Cable Harness Build and Connections – CST Cable Studio ... 85
Figure 4.4.3-4. Cable Harness Signal Transfer Simulation – Desired Path Transfer ... 87
Figure 4.3-5. Cable Harness Signal Transfer Simulation – Cross-talk ... 88
Figure 4.4.3-6. Cable Harness Signal Transfer Simulation – Coupling From Overshield ... 89
Figure 4.4.4-1. Cable Harness and Interface Circuits Imported in to Co-Simulation Framework for Transfer Checkout ... 90
Figure 4.4.4-3. Cable Harness with Interface Circuits Signal Transfer Simulation – Cross-talk ... 92

Figure 4.4.5-1. Cable Harness, Interface Circuits and CS114 Environment Imported in to Co-Simulation Framework for Transfer Checkout 93
Figure 4.4.5-2. Cable Harness, Interface Circuits and CS114 Environment Signal Transfer Simulation – Desired Path Transfer 94
Figure 4.4.5-3. Cable Harness, Interface Circuits and CS114 Environment Signal Transfer Simulation – Coupling From Overshield 95
Figure 4.4.6-1. LRU 1 Connectors and Transition 3D Model - CST Microwave Studio 96
Figure 4.4.6-2. LRU 1 Connectors/Transition Block in Co-Simulation Framework for Transfer Checkout 97
Figure 4.4.6-3. LRU 1 Connectors/Transition Block – Transfer through Desired Signal Paths 98
Figure 4.4.6-4. LRU 2 Connectors and Transition 3D Model - CST Microwave Studio 99
Figure 4.4.6-5. LRU 2 Connectors/Transition Block in Co-Simulation Framework for Transfer Checkout 100
Figure 4.4.6-6. LRU 2 Connectors/Transition Block – Transfer through Desired Signal Paths ... 101
Figure 4.4.7-1. Cable Harness, Connectors, Interface Circuits and CS114 Environment Imported in to Co-Simulation Framework for Transfer Checkout - left side 102
Figure 4.4.7-2. Cable Harness, Connectors, Interface Circuits and CS114 Environment Imported in to Co-Simulation Framework for Transfer Checkout – right side 103
Figure 4.4.7-3. Cable Harness, Connectors, Interface Circuits and CS114 Environment Signal Transfer Simulation – Desired Path Transfer 104
Figure 4.4.7-4. Cable Harness, Connectors, Interface Circuits and CS114 Environment Signal Transfer Simulation – Environment Transfer through Overshield 105
Figure 4.4.8-1. Complete System in Co-Simulation Framework for CS114 Simulation – left side schematic 106
Figure 4.4.8-2. Complete System in Co-Simulation Framework for CS114 Simulation – right side schematic 107
Figure 4.4.8-3. Complete CS114 Simulation – Results: Raw Calibration Current and Shield Currents 108
Figure 4.4.8-4. Complete CS114 Simulation – Results: Raw Interference Probe Voltages 109
Figure 4.4.8-5. Complete CS114 Simulation – Results: Computed Scaling Factors Per MIL-STD-461F Methods 110
Figure 4.4.8-7. Complete CS114 Simulation – Results: Corrected Victim Net Currents 112
Figure 4.4.8-8. Complete CS114 Simulation – Results: Corrected Victim Circuit Interference Voltages 113
Figure 4.4.9-1. CS114 Simulation Results Analysis - Interference Prediction for Digital Video Circuit 114
Figure 4.4.9-2. CS114 Simulation Results Analysis - Interference Prediction for Analog Video Circuit 115
Figure 4.4.9-3. CS114 Simulation Results Analysis - Interference Prediction for Ethernet Circuits 116
Figure 4.4.9-4. CS114 Simulation Results Analysis - Interference Prediction for Power Circuit. 117
Figure 4.1.10-1. Complete System in Co-Simulation Framework for CS114 Simulation w/ EMC Improvements – left side schematic 118
Figure 4.4.10-2. Complete System in Co-Simulation Framework for CS114 Simulation w/ EMC Improvements – right side schematic 119
Figure 4.4.10-3. CS114 Simulation Results Analysis - Simulation w/ EMC Improvements – Analog Video Circuit 120
Figure 4.4.10-4. CS114 Simulation Results Analysis - Simulation w/ EMC Improvements – Power Circuit 121

TABLE OF TABLES

Table 1.3-1. Units of Measure 10
Table 3.1-1. Description and Specification of Model Entity Blocks 37
Table 3.4-1. Simple Transfer Impedance Model Parameters for Popular Braid Coax Shields 48
Table 4.3-1. Entity Block Description and Specification for Example Model 64

Context Model Library – EMI Susceptibility via Cables

Abstract: *This report presents a set of modeling methods and general context models for predicting susceptibility of electronic equipment to MIL-STD-461F environments with respect to reception of interference via the cable/connector assemblies. The primary focus of the resulting methods and models is to support the DARPA Component, Context, and Manufacturing Model Library (C2M2L) effort to reduce the design and development cycle time of military ground vehicles. The report covers three areas – System Electromagnetic Environment Flowdown to Equipment and Cable/Connector Assemblies, Modeling Method for Cable/Connector Assemblies, and Detailed Example.*

1. INTRODUCTION

Electronic subsystems and equipment in military ground vehicles are subject to Electromagnetic Interference (EMI) from sources internal and external to the vehicle via pick-up and subsequent conduction through the cables and wires attached to the equipment. The general external electromagnetic environment presented to a military system (aircraft, ship, ground vehicle) is defined in MIL-STD-464C, "*Electromagnetic Environment Effects Requirements for Systems*." In the end, the system level electromagnetic environment presents itself at the equipment connector pins as a voltage or current with an equivalent source impedance to result in potential upset of the electrical interface and/or damage to electronic components, unless adequate protection is part of the equipment and/or cable-connector assembly design. The interference voltage or current may be a transient (typically described in the time domain), or it may be a somewhat steady-state condition at a particular frequency.

The typical electromagnetic interference environments that are presented to cable-connector assemblies for equipment used in military vehicles are defined in standards such as MIL-STD-461F, "*Requirements for the Control of Electromagnetic Interference Characteristics of Subsystems and Equipment*." MIL-STD-464C Section 5.7 specifically calls out the interference control requirements of MIL-STD-461 for individual subsystems and equipment.

The requirements in MIL-STD-461F represent the electromagnetic environment expected of subsystems and equipment, and the associated cables, with adjustments made for standard laboratory test setups for compliance verification. MIL-STD-461F contains various "limits" for each type of electromagnetic environment based on the type of platform (system) and the location of the subsystem or equipment and its associated cabling within the system. MIL-STD-461F also contains the compliance verification test methods for each electromagnetic environment. A key requirement is to verify compliance with cables that are representative of the intended installation. Section 2 of this report thus addresses the external electromagnetic environments and presents the environment models, as applicable to cable assemblies, in detail.

Typically, the design and analysis for EMI compliance of equipment and subsystems falls into two areas – the equipment items themselves and the cable/connector assemblies.

Design of the equipment for EMI compliance centers around designing circuits, both electrically and mechanically (e.g. printed circuit board layout) for low emissions and a required level of immunity, and

designing chassis shielding to provide electromagnetic attenuation at least as great as the difference between a circuit's emission levels and immunity and the required emissions limit and the external electromagnetic environment to which the equipment must be immune. The equipment design may also utilize filtering, typically low pass networks, at the shield boundary to attenuate interference picked up by external wires and cable, as well attenuate internally generated noise to reduce its radiation via external wires and cables. Modeling and analysis allows filter performance prediction to be made before hardware is built. A filter's performance with respect to the attenuation of the interference must be considered along with its effect on the desired signal going through it.

The second area of design and analysis for EMI control and compliance centers on the cable/connector assembly design. Cable/connector assembly design and analysis for EMC considers conductor size, characteristic impedance, electrical terminations, shielding, shield characteristics, shield termination methods, shield ground references and coupling between conductors within a cable bundle, and the resulting voltages and currents coupled in from the external environment. The cable/connector assembly modeling is the focus of this effort. Modeling and simulation can be used early in the system design to analyze trade-offs between cable and connector weight (shielding), filtering, signaling schemes and electrical interface design.

This report documents a set of generic context environment models and modeling methods to allow prediction of the interference coupled to equipment connector pins and interface circuits resulting from exposure of the vehicle's cables to radiated and conducted (induced) interference.

Stimuli to the model include the CS114, CS115, CS116, RS103 and RS105 environments as applied per MIL-STD-461F.

Section 2 of this report shows how the system level environments translate to the applicable MIL-STD-461F environment. These applicable environments, and hence the stimuli to the simulation models, are described as CS114, CS115, CS116, RS103 and RS105. A model of each of the five environments is provided.

Inputs to the cable model include cable and connector cross-section details, transfer impedance of the cable and connector shielding, and interface circuit design details.

Outputs from the simulations using these models would include the time domain and/or frequency domain interference at the connector pins presented in terms of voltages and currents. The resulting interference levels can then be compared to the levels of the desired signals and component damage threshold levels to determine if interface failure (upset) and/or component damage is expected. Of course, if unacceptable upset and/or damage are predicted, changes to the design of the cable and/or the protection at the interface circuits can be made to improve the probability of electromagnetic compatibility and first time design success. Section 3 of this report presents the modeling and simulation methodology.

As transfer impedance of a cable shield characteristic is often not available from the shield vendor, methods are presented to allow the determination the transfer impedance of cable shields and connectors.

It should be noted that simulation of electromagnetic effects is a complex computational intensive effort. Computer-based modeling tools continue to evolve with ever increasing capability. This project identified a simulation tool that is believed to be the best mix between tool capability, user base, and ease of use with respect to model development and analysis against the MIL-STD-461F susceptibility environments as seen at equipment interface cables typically used in military vehicles. Section 4 of this report presents a detailed analysis example for a multi-branch cable that may be found in a vehicle.

1.1 Scope

This report documents the findings with respect to the scope in Rockwell Collins Environmental Effects Engineering C2M2L Statement of Work (Appendix A). Specifically, the following is presented.

- The system level electromagnetic environment and flowdown to subsystems, equipment and cables
- Interference environment models as present at the cables
- Cable/connector assembly modeling approach
- Definition of required model inputs
- Methods of obtaining model inputs
- Cable Shield Transfer Impedance Determination
- Simulation of the electromagnetic environments
- Model and simulation workflow
- Examples

1.2 Reference Documents

The following documents are referenced in this report and may be referred to for addition information and background.

MIL-STD-464C – *Department of Defense Interface Standard: Electromagnetic Effects Requirements for Systems,* 1 December 2010.

MIL-STD-461F – *Department of Defense Interface Standard: Requirements for the Control of Electromagnetic Interference Characteristics of Subsystems and Equipment*, 10 Dec 2007.

MIL-HDBK-235-1C – *Department of Defense Handbook: Military Operational Electromagnetic Environment Profiles, General Guidance*, 1 Oct 2010

MIL-HDBK-235-8 (Classified) – *Department of Defense Handbook: External Electromagnetic Environment Levels from High-Power Microwave Systems (U).*

IEC 61000-2-13 - *Electromagnetic Compatibility – Part 2-13: Environment – High-Power Electromagnetic (HPEM Environments – Radiated and Conducted*, First edition, March 2005.

IEC 61000-4-35 - *Electromagnetic Compatibility – Part 4-35: Testing and Measurement Techniques – HPEM Simulator Compendium*, Edition 1.0, July 2009.

MIL-STD-2169 (Classified) – *High Altitude Electromagnetic Pulse Environment (U).*

CST Studio Suite 2012 User Manual Set – *Installation, Modeling, Post-Processing, Workflow & Solver Overviews*. Part of CST Studio Suite 2012 package, Computer Simulation Technology AG, 2012.

IEC 62153-4-4 – *Metallic Communication Cable Test Methods – EMC – Shielded screening attenuation, test methods for measurement of screening attenuation, a_s, up to and above 3 GHz*, First edition. May 2006.

1.3 Units of Measure

Unless specifically noted otherwise, the units of measure for quantities presented herein are assumed to be as listed in Table 1.3-1.

Table 1.3-1. Units of Measure

Quantity	Unit	Symbol
Area	Sq meter	m^2
Capacitance	Farad	F
Charge	Coulomb	C
Conductivity	Siemens per meter	S/m
Current	Ampere	A
Electric Field Strength (E-field Strength)	Volt per meter	V/m
Impedance	Ohm	Ω
Inductance	Henry	H
Length	meter	m
Magnetic Field Strength (H-field strength)	Ampere per meter	A/m
Permeability	Henry per meter	H/m
Permittivity	Farad per meter	F/m
Power	Watt	W
Resistance	Ohm	Ω
Voltage	Volt	V

1.4 List of Acronyms

The following acronyms are used herein.

BCI	Bulk Cable Injection
C2M2L	Component, Context, and Manufacturing Model Library
CAD	Computer Aided Design
CST	Computer Simulation Technology AG
EM	Electromagnetic
EMC	Electromagnetic Compatibility
ESD	Electrostatic Discharge
EME	Electromagnetic Environment
EMI	Electromagnetic Interference
EMP	Electromagnetic Pulse
HEMP	High-altitude Electromagnetic Pulse
HPM	High-Power Microwave
ICD	Interface Control Document
IEC	International Electrotechnical Committee
I/O	Input / Output
LISN	Line Impedance Stabilization Network
LRU	Line Replaceable Unit
MCAD	Mechanical Computer Aided Design
NTSC	National Television Standard Committee

NEMP	Nuclear (generated) Electromagnetic Pulse
PCB	Printed Circuit Board
RF	Radio Frequency
rms	Root Mean Square
TLM	Transmission Line Matrix

1.5 Definitions

Definitions of key terms used within this report are presented below. They are applicable per EMI requirements stated in MIL-STD-464C and MIL-STD-461F.

2.5-D Model – An electromagnetic model that uses Transmission Line Matrix (TLM) or a Partial Element Equivalent Circuit Model (PEEC) representation of a set of objects being modeled based the cross-section dimensions of the set of objects. This type of model is sometimes referred to as a 2-D model, but is often more correctly stated as a 2.5-D model since some consideration with respect to mesh size against the highest frequency of interest and wave propagation time in the 3rd orthogonal direction is part of the modeling process.

Cable - A set of one or more conductors following a common route designed to provide a particular interface, such as power input, Ethernet, analog video output, digital video input. The conductors in a cable are assumed to be electromagnetically coupled to each other, although coupling may be weak between conductors separated by shields.

Cable Bundle - A section of a cable harness containing all the conductors that occupy the same route. A cable bundle will contain one or more cables. Technically, a cable bundle may consist of only one wire or lead. The conductors in a cable bundle, and the conductors within the cables they contain (if applicable) are assumed to be electromagnetically coupled to each other, although coupling may be weak between conductors separated by shields. A cable bundle runs between two connectors, between one connector and a branch node, or, between to branch nodes. From the standpoint of applying the MIL-STD-461F CS114, CS115 and CS116 environments, a cable bundle includes all the conductors associated with a particular equipment connector.

Cable Harness – A set of cable bundles used for interconnection of equipment items and to the boundary of the electromagnetic volume of interest (if applicable) within a simulation problem space. Electromagnetic coupling between conductors in different cable bundles that make up a cable harness may be present, although it is often insignificant and thus analytically ignored when compared to other couplings of concern. For the analysis described herein, electromagnetic coupling between cable bundles that make up a cable harness will be ignored.

Equipment item – A electric item designed and typically procured as a stand-alone item that is directly attached to the vehicle or equipment mounting structure (e.g. communications equipment rack). Equipment items connect to other equipment items within a system or subsystem via cable assemblies. An item, from an EMI control standpoint, that is applicable to the EMI requirements contained in MIL-STD-461F with minimal tailoring. "Equipment item" and Line Replaceable Item (LRU) are often considered synonymous.

Electronic Module – A function specific subassembly that is part of a higher level equipment item. Modules typically interface with other modules through a backplane or rack module and are often shielded from some of the electromagnetic environments present at the equipment and subsystem levels.

With the exception of areas where a module interfaces to other equipment via platform cables, this effort does not address modules.

Gross over-shielded Bundle – A shield cable bundle containing a relatively high quality bundle shield, with the shield being electrically bonded to a conductive backshells on the bundle's connectors such that, for all practical purposes, the interference present on the shielded conductors from the external environment applied in the vicinity of the over-shield will be indirectly due to environment induced current flow on the over-shield rather than from direct coupling to the external environment.

Gross overbraid shield – A shield on a gross over-shielded bundle that uses a MIL-QQB575R, or equivalent, braid cable bundle shield.

Ground plane - A reference plane for the electromagnetic environment and for physical objects used in an electromagnetic model or simulation. The ground plane, per common convention in EMI/EMC problems, is located at z = 0 in the 3-dimensional Cartesian coordinate problem space. The ground plane is a conductor, but it does not have to be a perfect conductor.

Grounded node – A node containing a conductor that connects to the ground plane at the physical planar (x-y plane if z = 0 plane is the ground plane) location of the node.

Line Replaceable Unit (LRU) – See Equipment Item.

Node – A point in three dimensional space that can be used as a terminus for a segment and/or a set of conductors.

Platform – A physical structure that hosts system electronic equipment. Examples include aircraft, ground vehicles, fixed facility buildings and soldiers (for a soldier-mounted system)

Shield - A conductor used for one or more of the following purposes:

(a) A conductor not specifically designed as a signal return, but rather for the attenuation of electromagnetic energy that is being imposed upon a wire, a group of wires, a cable, a cable bundle and/or a cable harness by geometrically surrounding the conductors being shielded. The imposed interference may be from the external environment or from other conductors. A shield over a wire pair that interfaces a remote temperature sensor (thermo-resistor) located in an area of intense electromagnetic radiation to a data acquisition receiver/processor is an example of this type of shield – the shield is used to reduce interference seen across the input port of the receiver.

(b) A conductor not specifically designed as a signal return, but rather for the reduction of coupling from a particular wire, a group of wires, a cable, a cable bundle and/or a cable harness to the environment by geometrically surrounding the conductors being shielded. The shield of a shielded twisted pair cable used use for a transformer coupled Ethernet interface is an example of this type of shield – the shield is used to reduce emissions from the cable.

(c) A signal or power return conductor having a cross-section that surrounds the signal or power conductor(s) designed with the intention of reducing signal radiation, reducing the coupling of external interference and/or providing a particular characteristic transmission line impedance. The shield on a coax cable used for cable TV is an example of this type of shield, as well as the shield on a transition minimized differential signaling pair used in a Digital Video Interface (DVI) interface - the shield is the signal return.

Route – A physical path, consisting of one or more segments, for a cable and/or cable bundle.

Segment – A physical path between two nodes.

Shielded Cable – A cable (per definition above) containing one or more shields (as defined above).

Shielded Cable Bundle – A cable bundle (as defined above) containing a shield, or multiple layers of shields, that run the length of the bundle and geometrically surrounds all the conductors in the bundle.

System - A composite of equipment, subsystems, skilled personnel, and techniques capable of performing or supporting a defined operational role (MIL-STD-464C definition). With respect to hardware, "system" refers to top level platform (ship, aircraft, fixed station, ground vehicle).

Subsystem – One or more integrated equipment items interfaced within a system or platform to perform a top level function.

2. THE ELECTROMAGNETIC ENVIRONMENTS

The baseline system level electromagnetic environment for military ground vehicles is specified in MIL-STD-464C. This standard contains a "main body" which states a baseline set of requirements and electromagnetic environments to which systems are exposed to. It also contains an appendix which provides rationale, guidance, and lessons learned for each requirement to enable the procuring activity to tailor the baseline requirements for a particular situation. Further guidance on specific tailoring of the environment is provided in MIL-HDBK-235-1C. In general, the system level environments presented in MIL-STD-461C are "worst case". Often, after consideration of mission, platform locations and the criticality of equipment, subsystem or system survival and operational needs with trade-offs centered around weight, cost and procurement schedule, the procuring agency may present only a subset of the requirements as being applicable. As an example, with respect to the nearby lightning threat (the baseline threat is specified with a 10 meter distance), MIL-STD-464C states: "*Many ground systems can accept some risk that the system operates only after a moderate lightning strike at a reasonable distance. For example, a requirement for equipment in a tactical shelter to survive a 90th percentile lightning strike at 50 m may represent reasonable risk criteria for that shelter. This type of requirement would result in a high level of general lightning protection at a reduced design and test cost.*"

2.1 Semantics

Per MIL-STD-464C, the term "system" refers to a composite of equipment, subsystems, skilled personnel, and techniques capable of performing or supporting a defined operational role. With respect to hardware, "system" refers to top level platform (ship, aircraft, fixed station, ground vehicle). This is how "system" will be used in this endeavor.

MIL-STD-461C defines a "subsystem" as a collection of devices or equipments designed and integrated to function as a single entity. A military vehicle may contain several subsystems, examples including a power distribution subsystem, a satellite radio navigation subsystem, a high frequency communication radio subsystem, an engine control system and a fire control subsystem. The subsystem not only includes equipment, but cables as well. Platform or facility cables and their associated connectors are often referred to as a subsystem by themselves – "cable/connector assemblies" will be used to describe this type of asset.

Subsystems contain integrated equipment items interfaced within a system or platform with specific cabling. An "equipment item" typically refers to a Line Replaceable Unit (LRU) that receives operating power, signal I/O and control functions via platform or facility wiring and is designed perform a specific function or task, and which can typically be procured as a stand-alone item.

Equipment may contain "modules", which may be line or field replaceable entities. When considering electromagnetic environments, "modules" are notably different than "equipment items" in that they often do not mechanically interface directly with the system platform or facility equipment racks, but rather interface to a host equipment item which may provide to it conditioned power, filtered signal I/O, and/or electromagnetic shielding. Because of this, modules typically cannot easily be tested by themselves in an electromagnetic environment derived from the system level electromagnetic environment. Hence the lowest level EMI compliance verification, and requirements for procurement, typically occur at the equipment item / Line Replaceable Unit level. It is very important to delineate these levels of distinction as this will drive how the system level environment is modeled to various parts of the system, especially when procurement of equipment, cables and modules is considered.

2.2 Ground Vehicle System Electromagnetic Environments

The baseline electromagnetic environment seen by ground vehicle systems is presented in MIL-STD-464C. The environments include those in which the source is from within the system as well as those that are sourced from outside the system. Each is described below, noting the absolute threat levels may be tailored by the procuring activity based on system location, mission profile and other previously mentioned trade-offs.

2.2.1 Radiated Radio Frequency (RF) Electromagnetic Environment (RF EME)

Radio and radar transmitters can present very high levels of energy and electromagnetic field strength to a system and the equipment and subsystems it contains. This type of environment is referred to as the external Radio Frequency (RF) Electromagnetic Environment (EME). RF EME is described in terms of field strength as a function of frequency. Table 4 in MIL-STD-464C presents the RF EME applicable to ground systems. This table represents typical worst-case field strengths that may be present in the area in which a ground system is operating. The sources of these electromagnetic fields are radiation from transmitter antennas of known radios used for communication, navigation and surveillance.

If a ground vehicle were to be operated on a ship deck, the baseline levels in Table 1 of MIL-STD-461C may apply as well.

Typically, the vehicle / platform structure provides some (6 to 20 dB) attention of this environment with respect to subsystems and equipment contained within.

2.2.2 Electromagnetic Pulse (EMP)

MIL-STD-464C states: "*The system shall meet its operational performance requirements after being subjected to the EMP environment. This environment is classified and is currently defined in MIL-STD-2169. This requirement is applicable only if invoked by the procuring activity. Compliance shall be verified by system, subsystem, and equipment level tests, analysis, or a combination thereof.*" Note that MIL-STD-2169 is a classified document. Often, if the EMP environment is applicable, subsystem and equipment specifications will contain detailed requirements with respect to required recovery time and output and actions during the recovery period. As an example, a mission display may be required to recover within 40 seconds after the EMP event and must never provide misleading or non-current data. The terms High-altitude Electromagnetic Pulse (HEMP) and Nuclear Electromagnetic Pulse (NEMP) are often synonymous with the term "EMP."

2.2.3 Lightning Effects

MIL-STD-464C presents aspects of the lightning environment that are relevant for designing protection against the direct effects lightning. "Direct effects" refers to the situation where the lightning channel attaches to the system. Also provided are aspects of the lightning environment associated with a direct strike that are relevant for protecting the platform from indirect effects. Based on the electrical characteristics of the platform or facility, the direct effects environment will induce currents into wires, cables and cable bundles inside the platform or facility as well as produce voltages at equipment connector pins. Thus indirect effects particulars can vary considerably between platforms and facilities and between locations within a platform or facility.

Indirect effects particulars for civil aircraft subsystems and equipment are typically determined by detailed testing, often on scale models or representative production sections of aircraft containing proposed cable assemblies. For subsystems and equipment on ships, ground platforms, ground facilities, and often military aircraft, generic "catch-all" equipment and subsystem standards, such as ANSI C62.14, IEC 61000-4 and -5 and CS115 and CS116 from MIL-STD-461F, are used to generically capture the indirect effects environment as present at cable assemblies and/or connector pins.

2.2.4 High Power Microwave (HPM)

MIL-STD-464C notes the existence of hostile radio frequency environments produced by microwave sources (weapon) capable of emitting high power or high energy densities. The weapon may produce, and direct at the system (e.g. ground vehicle), microwaves in the form of a single pulse, repetitive pulses, pulses with complex modulation, or continuous wave (CW) characteristics.

MIL-STD-464C (Section 5.4) states the following about HPM: "*The system shall meet its operational performance requirements after being subjected to the narrowband and wideband HPM environments. Applicable field levels and HPM pulse characteristics for a particular system shall be determined by the procuring activity based on operational scenarios, tactics, and mission profiles using authenticated threat and source data such as the Capstone Threat Assessment Report. This requirement is applicable only if specifically invoked by the procuring activity. Compliance shall be verified by system, subsystem, and equipment level tests, analysis, or a combination thereof.*"

The details of the HPM sources are generally classified. MIL-HDBK-235-8 (Classified) provides information on HPM threats. Appendix A.5.4 in MIL-STD-464C provides methods to compute resulting threat levels from a given HPM threat at a particular distance from the threat's victim.

IEC 61000-2-13 defines a set of typical radiated and conducted High Power Electromagnetic (HPEM) environment waveforms that may be encountered from an intentional generator targeting a civilian facility. IEC 61000-4-35 provides information about existent system-level HPEM simulators and their applicability as test facilities and validation tools for HPEM immunity testing. The terms Ulta Wideband (UWB) and High-Power Electromagnetic (HPEM) used in IEC 61000-2-13 are generally synonymous with the term HPM as used in military standards.

2.2.5 Electrostatic Discharge

MIL-STD-464C defines an Electrostatic Discharge (ESD) environment for electrical and electronic subsystems as an 8 kV contact discharge or a 15 kV air discharge. In both cases the discharge capacitance is 150 pF and the discharge resistance is 330 ohm, with the circuit inductance not to exceed 5 microhenry. This environment, as a worst case, is thus assumed to be present at equipment and cable assemblies. Although requirements for compliance testing to these exact requirements is typically not present in subsystem and equipment procurement documents, the intent is absorbed in other subsystem and equipment level EMI control compliance requirements, such as MIL-STD-461F CS115.

2.2.6 Internally Generated Electromagnetic Energy

MIL-STD-464C requires that the electromagnetic environment generated by equipment and subsystem is required to be controlled per MIL-STD-461. MIL-STD-461 places limits on conducted and radiated emissions from equipment and systems. These limits are generally designed to protect system radio

receivers from interference that may enter via the radio's antenna located within the system. Interference present at equipment and associated cables from energy unintentionally radiated and conducted from other nearby equipment is typically orders of magnitude less than what is seen from the environments described in 2.2.1 through 2.2.5 above.

2.3 Electromagnetic Environment for Ground Vehicle Subsystems and Equipment

Figure 2.3-1 is a diagram illustrating how the system level electromagnetic threat environments described in Section 2.2 above flow down to subsystems, equipment and associated cables.

From a procurement standpoint, the vehicle or platform is specified to exhibit electromagnetic compatibility (EMC) per a system level standard, such as MIL-STD-464C. With respect to immunity from the threats described in 2.2 above, compliance is verified typically by limited testing at the system level. Application of the complete threat environments as described in MIL-STD-464C is impractical. However, it is practically possible to set limits and demonstrate electromagnetic control compliance at the equipment and subsystem level. Hence MIL-STD-464C states: "*Individual subsystems and equipment shall meet interference control requirements (such as the conducted emissions, radiated emissions, conducted susceptibility, and radiated susceptibility requirements of MIL-STD-461) so that the overall system complies with all applicable requirements of this standard. Compliance shall be verified by tests that are consistent with the individual requirement (such as testing in accordance with MIL-STD-461).*" Thus equipment and subsystems, with their associated cables, are procured with the requirement to comply, with verification by test and/or analysis, to an equipment/subsystem EMI control standard, such as MIL-STD-461F.

MIL-STD-461F essentially condenses the many complex and extensive collection of external and internally generated electromagnetic threats present at the system or platform level and consolidates them into a practical set of generic requirements that can be economically tested and analyzed at the subsystem and equipment levels. The limits in MIL-STD-461F do consider a small amount of shielding and threat attenuation that may be provided by the host platform. For instance, the generic RF E-field radiated susceptibility requirement (RS103) for army ground equipment and associated cabling is 50 V/m from 30 MHz to 18 GHz, using 1 kHz, 50% duty cycle pulse modulation. This is notably different than the external EME stated for ground systems shown in MIL-STD-464 as illustrated in Figure 2.3-2. As seen in Figure 2.3-2 the MIL-STD-464C EME threat for ground vehicles contains many different frequency ranges, each containing a different type of modulation, and with high peak field strength levels. Note that the 50 V/m MIL-STD-461F requirement also considers the internal threats, such as RF produced by on-board radio antennas, to equipment. It is also important to note that testing systems, and large subsystems and equipment to the MIL-STD-464C levels is costly, as generally any swept frequency radiated E-field environment with peaks and/or averages greater than 600 V/ and 200 V/m, respectively, is considered very expensive to produce for testing items larger than a breadbox.

The following sections describe influencing factors, tailoring considerations, and the interference model for each of the five MIL-STD-461F electromagnetic environments that may be applicable to susceptibility via cables in ground vehicles.

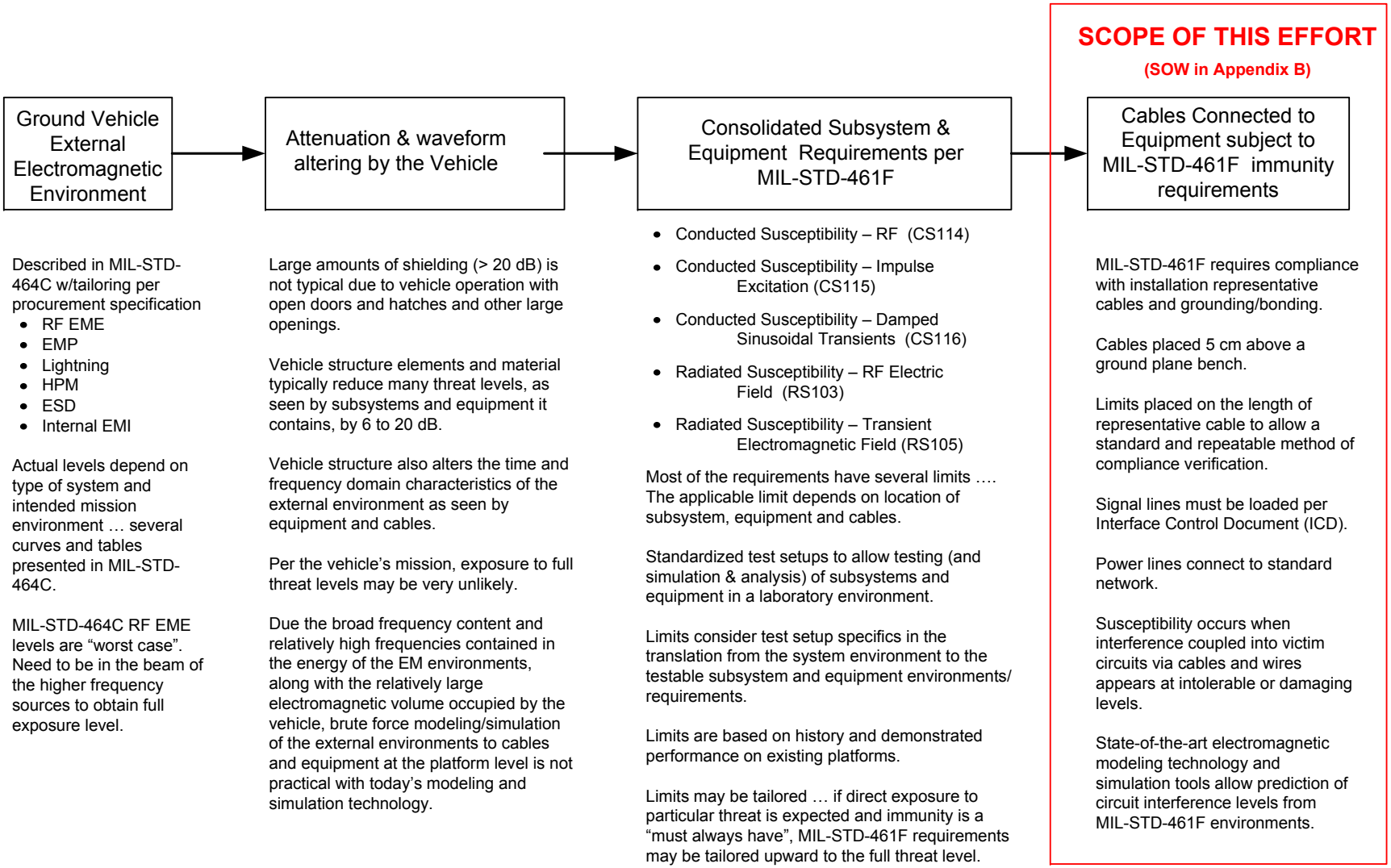

Figure 2.3-1. Flow-down of System Level Electromagnetic Threats to Equipment, Subsystems and Cables

MIL-STD-464C EME System Level Threat for Ground Systems (worstcase verified levels)

Frequency Range (MHz)		Electric Field (V/m – rms)	
		Peak	Average
0.01	2	73	73
2	30	103	103
30	150	74	74
150	225	41	41
225	400	92	92
400	700	98	98
700	790	267	267
790	1000	284	267
1000	2000	2452	155
2000	2700	489	155
2700	3600	2450	219
3600	4000	489	49
4000	5400	645	183
5400	5900	6146	155
5900	6000	549	55
6000	7900	4081	119
7900	8000	549	97
8000	8400	1095	110
8400	8500	1095	110
8500	11000	1943	139
11000	14000	3454	110
14000	18000	8671	243
18000	50000	2793	76

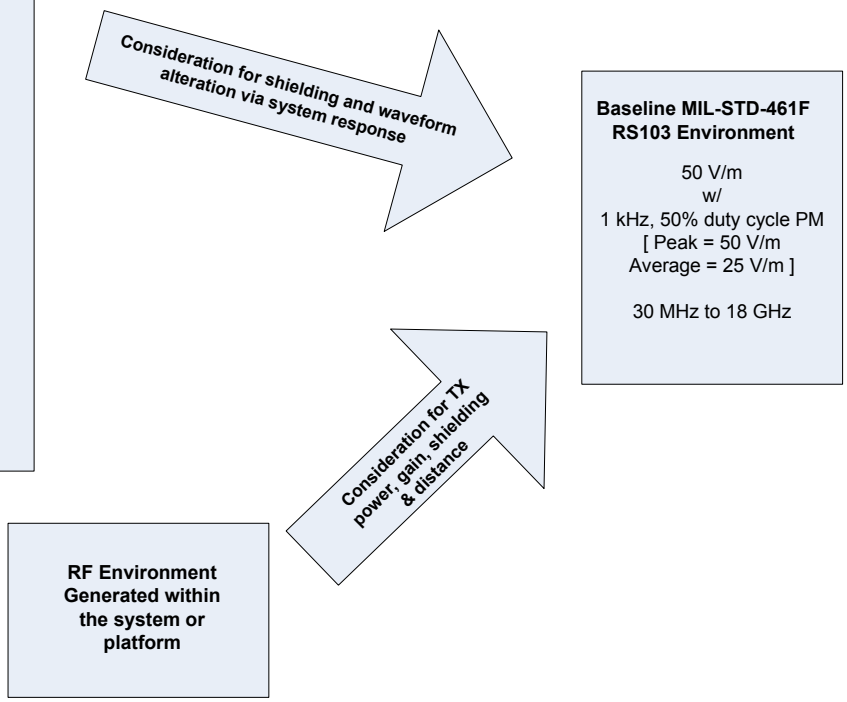

Figure 2.3-2. Origin of Baseline MIL-STD-461F RS103 Requirement Applicable to Ground System Equipment

2.3.1 Conducted Susceptibility - RF – CS114 Environment Model

The CS114 environment involves injection of RF over the frequency range of 10 kHz to 200 MHz on to all cables bundles[1], as well as the power cable without the return and ground conductors, in turn, using a current transformer injection probe. Injection occurs 10 cm from the equipment connector. The system level RF EME environment, and the internal system / platform transmitters and electrical equipment, produce the CS114 threat described in MIL-STD-461F at cables connecting to equipment and subsystems. The CS114 requirement is stated in terms of induced cable current from a source with a specified impedance and a limited power output capability. Figure 2.3.1-1 shows baseline CS114 limits. Figure 2.3.1-2 shows limit applicability as a function of platform type. From Figure 2.3.1-2, we see that for Army ground platforms, curve 3 and curve 4 are applicable for the 10 kHz to 2 MHz and the 2 MHz to 200 MHz frequency ranges, respectively.

[1] Includes power cables/bundles containing all applicable return and ground conductors.

The levels noted in Figure 2.3.1-1 are to be applied to cable bundles that are representative of the intended installation, as documented in the Interface Control Document (ICD), vehicle wiring diagrams, and/or the equipment installation manual. "Representative" equates to identical cable and wire cross-section, identical or electromagnetically equivalent connector assemblies, identical wire and cable shield properties (if shielding is applicable), and identical or equivalent shield and wiring termination, routing, and grounding at the connectors.

The equipment subject to the CS114 environment must be electrically bonded to the copper bench in a manner that represents how it is bonded (or not bonded) to the host platform. Key quantities to consider in equipment bonding include DC resistance, contact locations, bonding conductor material and geometry (if applicable), and the amount of surface area at bond between conductive surfaces.

The MIL-STD-461F CS114 requirements are also normalized to a condition where the cables under test are placed 5 cm above a conductive ground plane bench. Length may be limited to 10 meters if the installation cable is longer than 10 meters. If the length is unknown, a compliant default length of 3 meters is typically used, as this allows compliance to other baseline conditions stated in elsewhere in MIL-STD-461F.

The cables must also be terminated with loads to simulate the electrical properties (impedance, grounding, balance, and so forth) present in the actual installation.

Power leads are to be between 2 and 2.5 meters long and terminated into a line impedance stabilization network (LISN). Figure 2.3.1-3 shows a schematic of the LISN. The purpose of the LISN is to provide a standardized platform-representative power system impedance to the equipment or subsystem being tested or analyzed.

As noted in MIL-STD-461F, the limits are derived from measurements made on platforms that were basically electrically conductive, but not designed to have intentionally shielded volumes. Also, as noted in MIL-STD-461F, the platform can be illuminated with a low level version of the EME threats while monitoring induced levels on cables, scaling the measured levels by the same factor used for the EME threat to determine the expected levels to tailor the baseline requirements.

MIL-STD-461F presents specific requirements for the application of the CS114 environment to cables and leads – proper attention to these details will assure correct translation of the system environment to the cable/connector assemblies. Figure 2.3.1-4 describes the CS114 environment in terms of an electrical model with equations that can be used to simulate the environment as applied to cable bundles, and to power cables with power returns and grounds excluded.

Note that Figure 2.3.1-4 contains three schematics. The first is for the establishment of the reference maximum interference <u>power</u> from the environment source that could be coupled to the cable bundle of interest. The second two schematics represent the interference as applied to the cable bundle or cable of interest. If the cable bundle has a gross over-shield (often implemented with a MIL QQB575R braid shield and thus referred to as a "gross overbraid shield"), then injection of the interference would be viewed as direct coupling to the over-shield conductor only. Characteristics of the over-shield will determine coupling from it to the conductors it shields.

The third schematic in Figure 2.3.1-4 applies to cable bundles and cables that do not contain a gross over-shield. In this case, each conductor, or the shields on the shielded cables within the bundle, would be subjected to the direct injection of the environment. The total bundle injected current would divide amongst the outer conductors based on their terminating impedances and other electrical characteristics.

Per the equations in Figure 2.3.1-4, the environment model essentially applies current to a cable bundle or power cable less the returns and grounded conductors, through an injection probe driven by a source initially set to produce the current indicated in Figure 2.3.1-1 into a 100 Ohm loop, with that source level being reduced during test, if required, to the point where the resulting cable bundle current is limited to twice the Figure 2.3.1-1 current. It should be noted that the aforementioned levels are peak detected, but stated as the rms value of a continuous sinewave having that peak level. The CS114 RF is 1 kHz pulse modulated with a 50% duty cycle. The injection probe model shown in Figure 2.3.1-4 produces an insertion loss that is compliant to the MIL-STD-461F requirements.

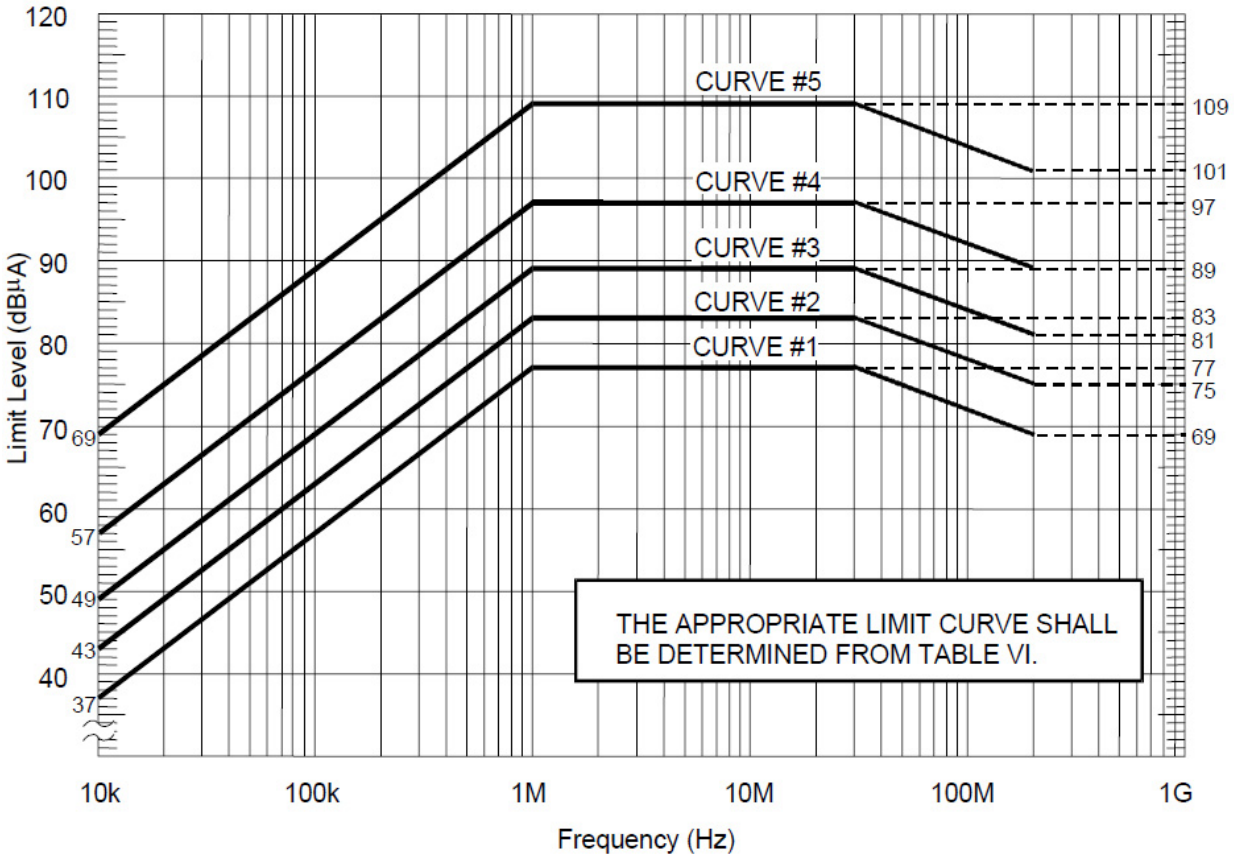

Figure 2.3.1-1. CS114 Current Limits

		LIMIT CURVE NUMBERS SHOWN IN FIGURE CS-114-1 AND LIMITS							
FREQUENCY RANGE	PLATFORM	AIRCRFAFT (EXTERNAL OR SAFETY CRITICAL)	AIRCRAFT INTERNAL	ALL SHIPS (ABOVE DECKS) AND SUBMARINES (EXTERNAL)*	SHIPS (METALLIC) (BELOW DECKS)	SHIPS (NON-METALLIC) (BELOW DECK)**	SUBMARINE (INTERNAL)	GROUND	SPACE
4 kHz to 1MHz	N	-	-	77 dBμA	77 dBμA	77 dBμA	77 dBμA	-	-
10 kHz to 2 MHz	A	5	5	2	2	2	1	3	3
	N	5	3	2	2	2	1	2	3
	AF	5	3	-	-	-	-	2	3
2 MHz to 30 MHz	A	5	5	5	2	4	1	4	3
	N	5	5	5	2	4	1	2	3
	AF	5	3	-	-	-	-	2	3
30 MHz to 200 MHZ	A	5	5	5	2	2	2	4	3
	N	5	5	5	2	2	2	2	3
	AF	5	3	-	-	-	-	2	3

KEY: A = Army
N = Navy
AF = Air Force

* For equipment located external to the pressure hull of a submarine but within the superstructure, use SHIPS (METALLIC) (BELOW DECKS)

** For equipment located in the hanger deck of Aircraft Carriers

Figure 2.3.1-2. CS114 Limit Curve Applicability

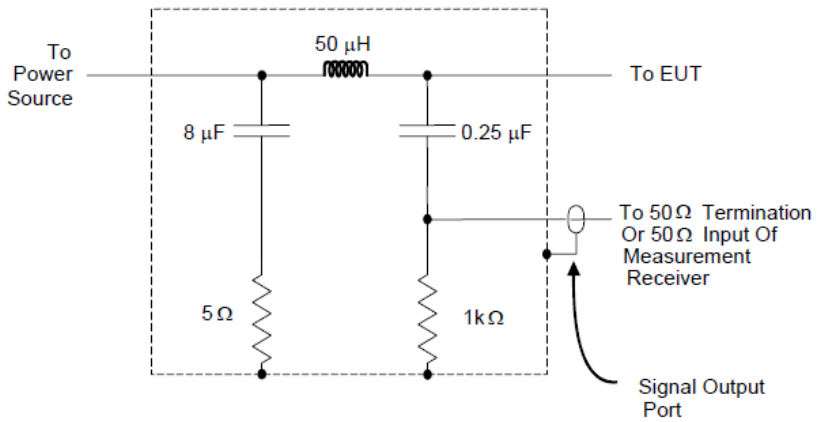

Figure 2.3.1-3. MIL-STD-461F Power Line Impedance Stabilization Network (LISN)

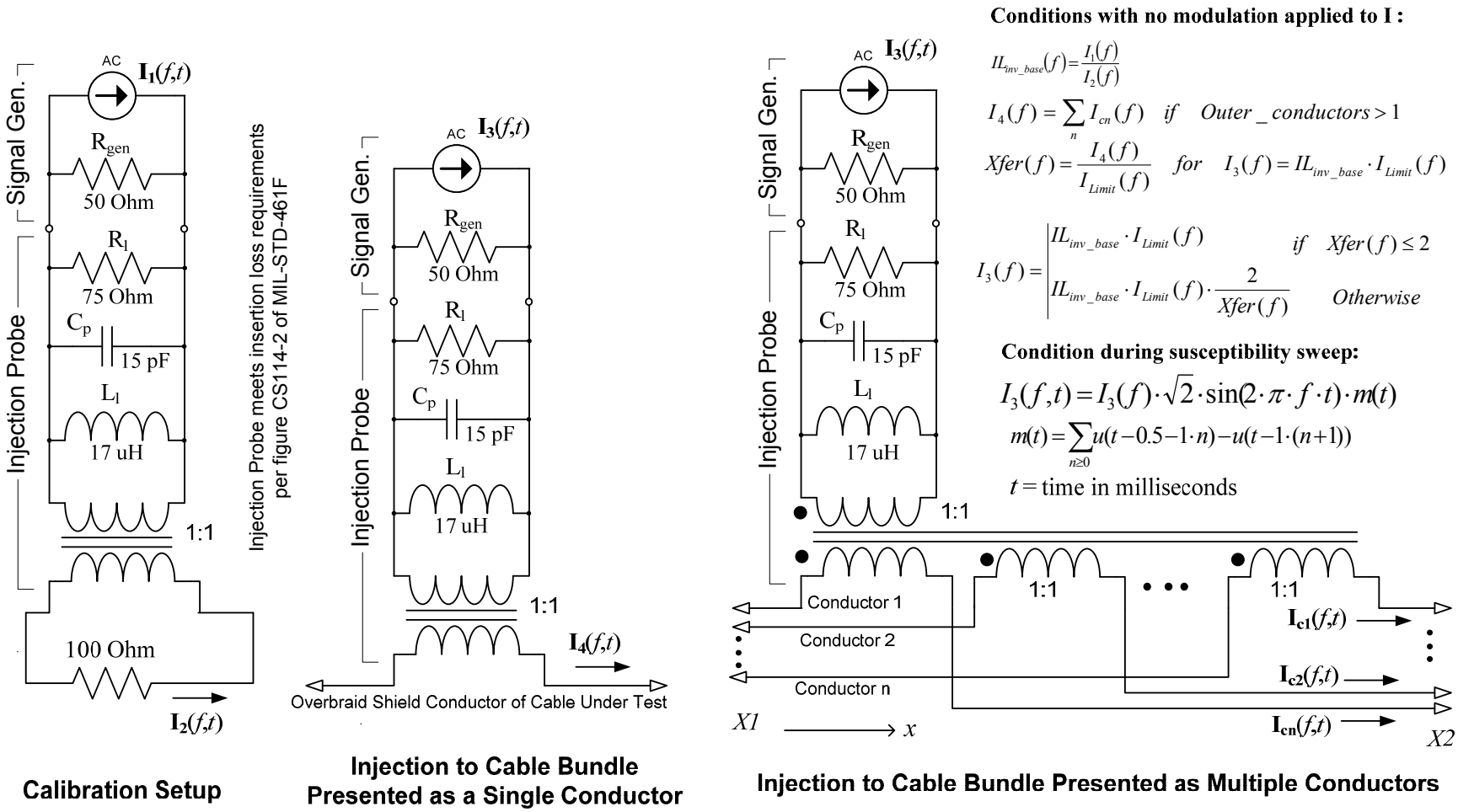

Figure 2.3.1-4. CS114 Environment Model

2.3.2 Conducted Susceptibility – Bulk Cable Injection, Impulse Excitation – CS115 Environment Model

The CS115 environment involves injection of fast transition time pulses on to cable bundles[2] as well as power cables with power returns and grounds excluded. The CS115 environment presents transients at the platform's cables that may be expected to result from the external lighting environment, certain HPM environments and EMP environments, as well as transients from platform switching operations and equipment/subsystem ESD. The CS115 excitation is a trapezoid pulse at the generator output; the actual waveform on the cable bundle or cable will be dependent on natural resonance conditions associated with cable and characteristics of the interfacing circuits.

Since this requirement is transient in nature, it may be acceptable from a system performance standpoint if desired signals are overcome with the transient, as response smoothing, signal processing and/or data error correction may make the incident transparent to the user. This must be considered before drawing conclusions from a simulation of the application of the CS115 environment to cable bundles, and power cables with returns and grounds excluded.

CS115 is applied to cable bundles and power cables with returns and grounds excluded using an injection probe (current transformer). Figure 2.3.2-1 shows the CS115 current waveform that would be present in a 100 Ohm calibration loop if the injection probe had a flat frequency response. Realistically, the current pulse in the 100 Ohm calibration loop would appear as shown in Figure 2.3.2-2 (from MIL-STD-461F). The calibration pulse is considered compliant if the peak current is equal to 5 Amperes and the rise and fall times are no greater than 2 nanoseconds, as shown in Figure 2.3.2-2.

After the transient generator is adjusted to produce a compliant pulse into a 100 Ohm loop, the injection probe is moved to each cable bundle, and then to each power cable with returns and grounds excluded, in turn, to allow application of the reference transient. The cable bundles must be representative of the intended installation. "Representative" equates to identical cable and wire cross-section, identical or electromagnetically equivalent connector assemblies, identical wire and cable shield properties (if shielding is applicable), and identical, or equivalent, shield and wiring termination, routing, and grounding at the connectors.

The equipment subject to the CS115 environment must be electrically bonded to the copper bench in a manner that represents how it is bonded (or not bonded) to the host platform. Key quantities to consider in equipment bonding include DC resistance, contact locations, bonding conductor material and geometry (if applicable), and the amount of surface area at bond between conductive surfaces.

The MIL-STD-461F CS115 requirements are also normalized to a condition where the cables under test are placed 5 cm above a conductive ground plane bench. Length may be limited to 10 meters if the installation cable is longer than 10 meters. If the length is unknown, a compliant default length of 3 meters is typically used, as this allows compliance to other baseline conditions stated in MIL-STD-461F.

The cables must also be terminated with loads to simulate the electrical properties (impedance, grounding, balance, and so forth) present in the actual installation.

Power leads are to be between 2 and 2.5 meters long and terminated into a line impedance stabilization network (LISN). Figure 2.3.1-3 shows a schematic of the LISN. The purpose of the LISN is to provide a platform representative power system impedance to the equipment or subsystem being tested or analyzed.

---

[2] Includes power cables/bundles containing all applicable return and ground conductors.

The CS115 pulses are to be applied at a 30 Hz rate for one minute to ensure that a sufficient number of pulses are applied to provide confidence that the equipment will not be upset.

MIL-STD-461F presents specific requirements for the application of the CS115 environment to cables bundles and power cables without returns and grounds – proper attention to these details will assure correct translation of the system environment to the cable/connector assemblies.

Figure 2.3.2-3 describes the CS115 environment in terms of an electrical model with equations that can be used to simulate the environment as applied to cable bundles, and to power cables with power returns and grounds excluded.

Note that Figure 2.3.2-3 contains three schematics. The first is for verification that the CS115 source can produce the required transient into a 100 Ohm loop. The second two schematics represent the interference as applied to the cable bundle of interest. If the cable bundle has a gross over-shield (often implemented with a MIL QQB575R braid shield and thus referred to as a "gross overbraid shield"), then injection of the interference would be viewed as direct coupling to the over-shield conductor only. Characteristics of the over-shield will determine coupling from it to the conductors it covers.

The third schematic in Figure 2.3.2-3 applies to cable bundles that do not contain a gross over-shield. In this case, each conductor, or the shields on the shielded cables, would be subjected to the direct injection of the environment. The total bundle injected current would divide amongst the outer conductors based on their terminating impedances and other electrical characteristics.

Per the equations in Figure 2.3.2-3, the environment model essentially applies current to a cable bundle or power cable less the return and ground conductors, through an injection probe driven by a source initially set to produce the current pulse shown in Figure 2.3.2-2 into a 100 Ohm loop. The injection probe model shown in Figure 2.3.2-3 is compliant to the MIL-STD-461F requirements as it produces a transient current into a 100 Ohm loop with the specified transition time, pulse width and peak amplitude. The circuit model of the probe represents the Solar EMC 9142-1N injection probe.

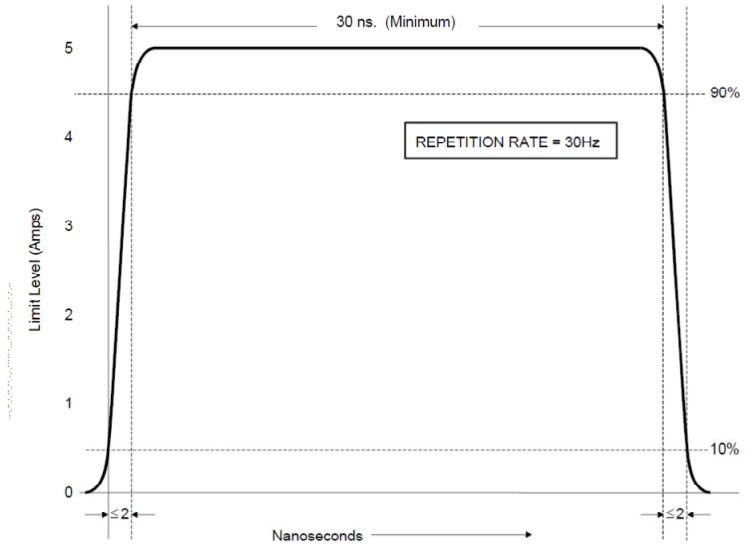

Figure 2.3.2-1. CS115 Pulse Waveform

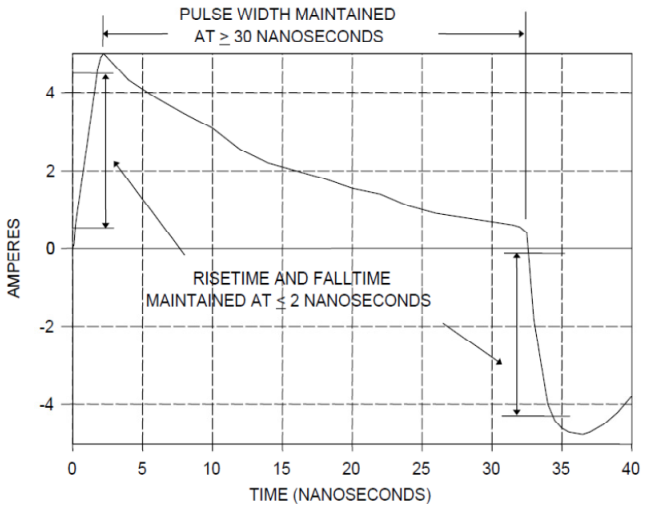

Figure 2.3.2-2. Compliant Injected CS115 Pulse Waveform into 100 Ohm Loop

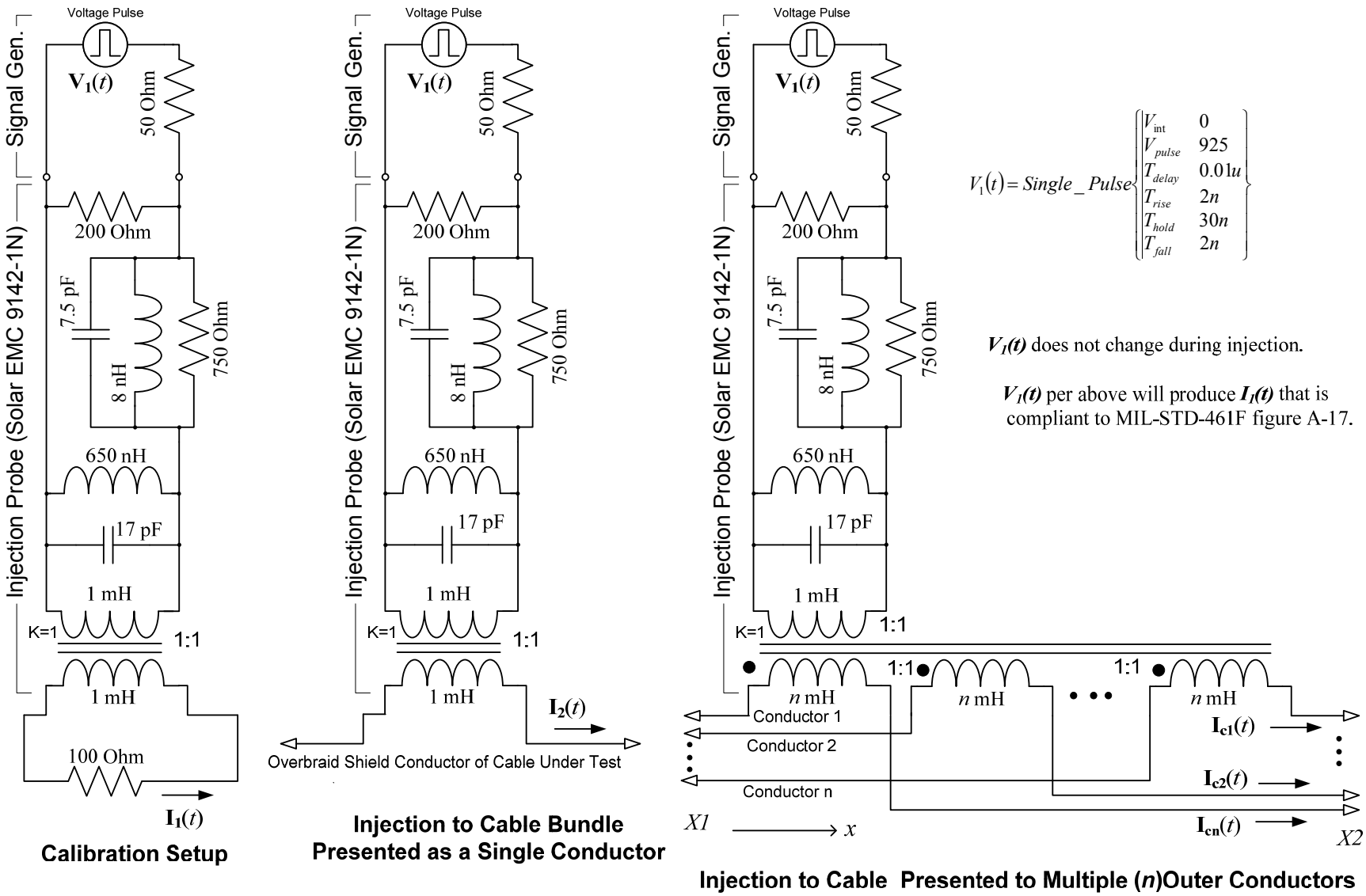

Figure 2.3.2-3. CS115 Environment Model

2.3.3 Conducted Susceptibility – Damped Sinusoidal Transients – CS116 Environment Model

The CS116 environment involves injection of damped sinusoidal transients over the frequency range of 10 kHz to 100 MHz onto all cables bundles[3], the power cables by themselves, as well as individual high side power leads, in turn, using a current transformer injection probe. The CS116 environment simulates electrical current and voltage waveforms occurring in platforms from excitation of natural resonances. (In contrast, CS115 excites natural resonances.) Damped sinusoidal waveforms are a common occurrence on platforms from both external stimuli such as lightning and EMP, and from platform electrical switching phenomena. Waveforms appearing on cables can be due to the cable itself resonating or due to voltage and current drives resulting from other resonances on the platform. Wide frequency coverage (10 kHz to 100 MHz) is included in the base environment to account for a wide range of possible conditions.

Since this requirement is transient in nature, it may be acceptable from a system performance standpoint if desired signals are overcome with the transient, as response smoothing, signal processing and/or data error correction may make the incident transparent to the user. This must be considered before drawing conclusions from a simulation of the application of the CS116 environment to cable bundles, power cables and individual high side power leads.

Figure 2.3.3-1 shows the required damp sinusoid current waveform as present when injected into a 100 Ohm loop. Figure 2.3.3-2 presents the limit values for I_p. Typically, evaluation by test is performed at 10 kHz, 100 kHz, 1 MHz, 3 MHz, 10 MHz, 30 MHz and 100 MHz.

The damped sinusoid waveforms are to be applied to cable bundles that are representative of the intended installation. "Representative" equates to identical cable and wire cross-section, identical or electromagnetically equivalent connector assemblies, identical wire and cable shield properties (if shielding is applicable), and identical, or equivalent, shield and wiring termination, routing, and grounding at the connectors.

The equipment subject to the CS116 environment must be electrically bonded to the copper bench in a manner that represents how it is bonded (or not bonded) to the host platform. Key quantities to consider in equipment bonding include DC resistance, contact locations, bonding conductor material and geometry (if applicable), and the amount of surface area at bond between conductive surfaces.

The MIL-STD-461F CS116 requirements are also normalized to a condition where the cables under test are placed 5 cm above a conductive ground plane bench. Length may be limited to 10 meters if the installation cable is longer than 10 meters. If the length is unknown, a compliant default length of 3 meters is typically used, as this allows compliance to other baseline conditions stated in MIL-STD-461F.

The cables must also be terminated with loads to simulate the electrical properties (impedance, grounding, balance, and so forth) present in the actual installation.

Power leads are to be between 2 and 2.5 meters long and terminated into a line impedance stabilization network (LISN). Figure 2.3.1-3 shows a schematic of the LISN. The purpose of the LISN is to provide a platform representative power system impedance to the equipment or subsystem being tested or analyzed.

As noted in MIL-STD-461F, the limits are set at levels that cover most induced levels found in platforms during system-level testing to external transient environments.

[3] Power cables to be include in the bundle if present with other cables using the same connector.

MIL-STD-461F presents specific requirements for the application of the CS116 environment to cable bundles, power cables and high side power leads – proper attention to these details will assure correct translation of the system environment to the cable/connector assemblies. Figure 2.3.3-3 describes the CS116 environment in terms of an electrical model with equations that can be used to simulate the environment as applied to cable bundles, power cables and high side power leads.

Note that Figure 2.3.3-3 contains three schematics. The first is for the establishment of the source characteristics that will produce the required damped sinusoid current pulse into the base 100 Ohm calibration loop. The second two schematics represent the interference as applied to the cable bundle of interest. If the cable bundle has a gross over-shield (often implemented with a MIL QQB575R braid shield and thus referred to as a "gross overbraid shield"), then injection of the interference would be viewed as direct coupling to the over-shield conductor only. Characteristics of the over-shield will determine coupling from it to the conductors it covers. The second schematic in Figure 2.3.3-3 is also applicable to individual high side power leads.

The third schematic in Figure 2.3.3-3 is applicable to a multiple conductor cable bundle that does not contain a gross over-shield. In this case, each conductor, or the shields on the shielded cables that make up the outer conductors of the cable bundle, would be subjected to the direct injection of the environment. The total bundle injected current would divide amongst the outer conductors based on their terminating impedances and other electrical characteristics.

Per the equations in Figure 2.3.3-3, the environment model essentially applies current to a cable bundle, a power cable, or an individual lead, through an injection probe, driven by a source initially set to produce the current waveform described in Figures 2.3.3-1 and 2.3.3-2 into a 100 Ohm loop. That source level is reduced, if required, to the point where the resulting peak cable bundle, cable or lead current is limited to the value shown Figure 2.3.3-2. The injection probe model shown in Figure 2.3.3-3 produces an insertion loss that is compliant to the MIL-STD-461F requirements and is representative of what would be expected to be used in an EMI test lab. The circuit model of the probe represents the ETS Lindgren models 95236-1 and 95242-1 injection probes.

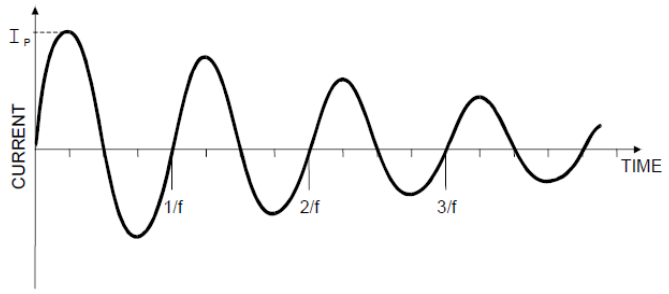

NOTES: 1. Normalized waveform: $e^{-(\pi f\, t)/Q} \sin(2\pi f t)$

Where:
f = Frequency (Hz)
t = Time (sec)
Q = Damping factor, 15 ±5

2. Damping factor (Q) shall be determined as follows:

$$Q = \frac{\pi(N - 1)}{\ln(I_P/I_N)}$$

Where:
Q = Damping factor
N = Cycle number (i.e. N = 2, 3, 4, 5,…)
I_P = Peak current at 1st cycle
I_N = Peak current at cycle closest to 50% decay
ln = Natural log

3. I_P as specified in Figure CS116-2

Figure 2.3.3-1. CS116 Waveform

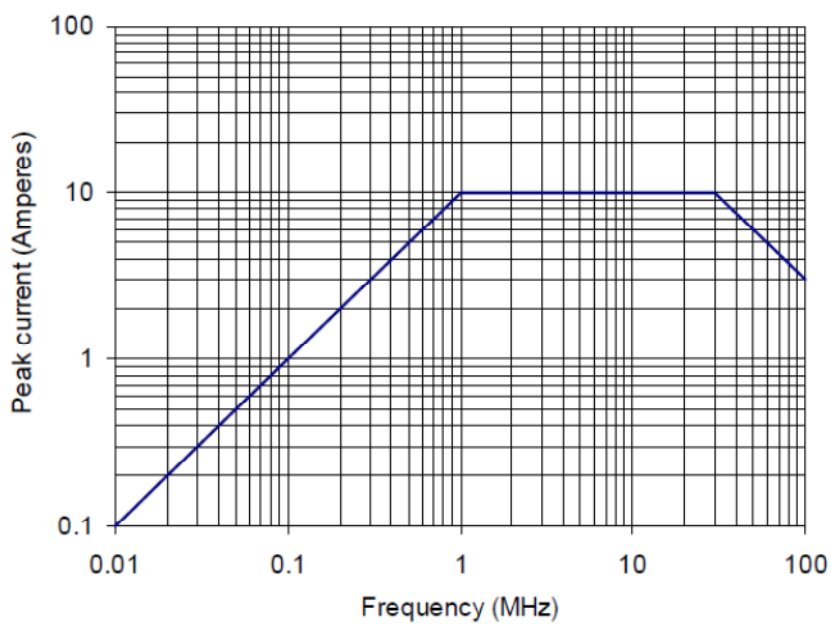

Figure 2.3.3-2. CS116 Ip Limit

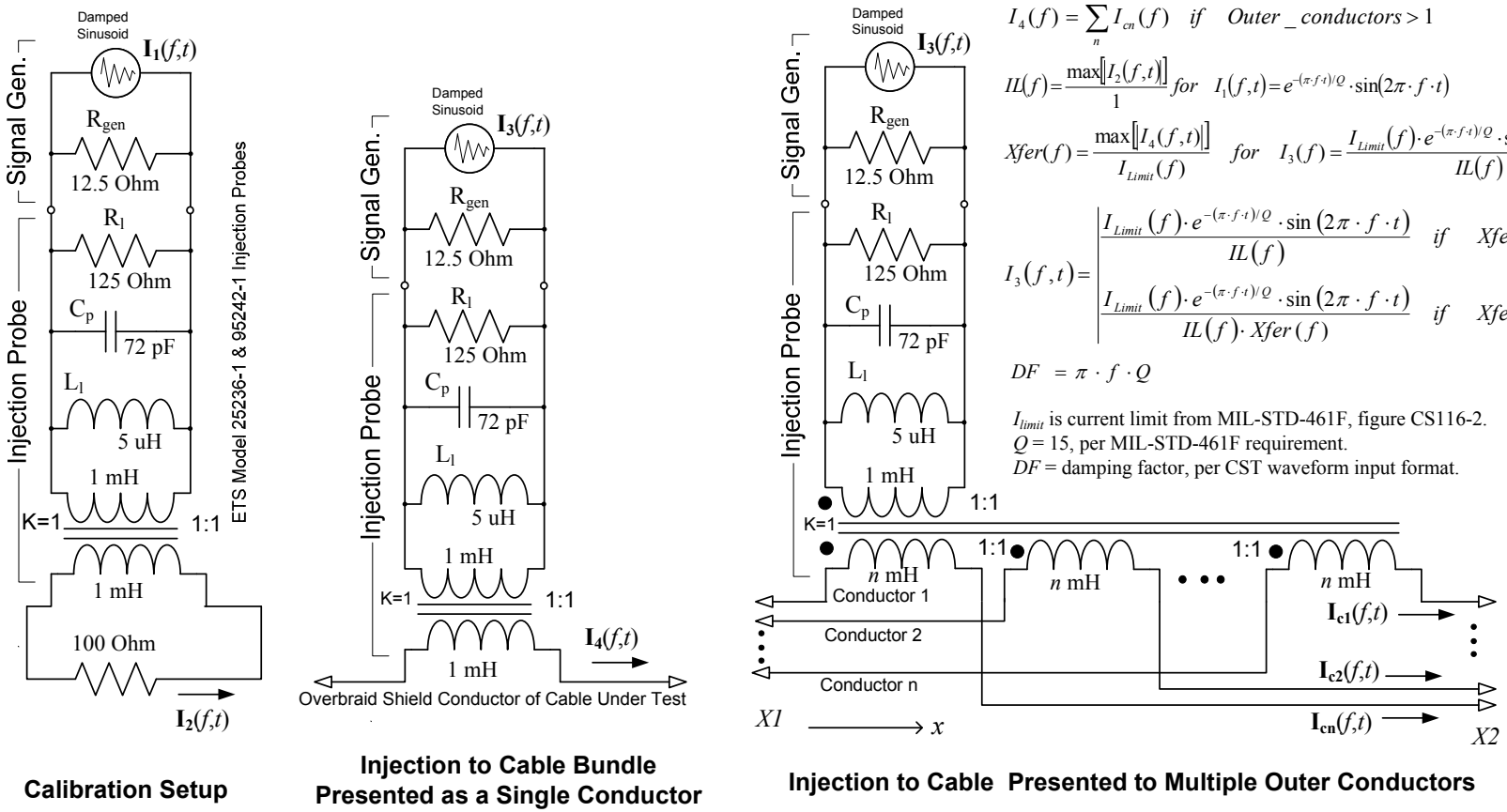

Calibration Setup

Injection to Cable Bundle Presented as a Single Conductor

Injection to Cable Presented to Multiple Outer Conductors

Figure 2.3.3-3. CS116 Environment Model

2.3.4 Radiated Susceptibility- Electric Field - RS103 Environment Model

After consideration of the EME threat and how the fields are attenuated and altered by a typical ground vehicle structure between the threat and the equipment and subsystem, as well as measurements of field strengths present at subsystems and equipment due to radiation from on-board radio transmitter antennas, MIL-STD-461F specifies a baseline E-field environment of 50 V/m from 30 MHz to 18 GHz at equipment and subsystems. This environment is specified under a particular test setup for application of the 50 V/m field.

Although the system level EME environment specified in MIL-STD-464C extends down to 2 MHz, and many ground vehicles do contain on-board HF radio transmitters (2 to 30 MHz), there is no radiated E-field requirement for the 2 to 30 MHz frequency range in MIL-STD-461F. This is because equipment and subsystems, if susceptible to this environment in the 2 to 30 MHz frequency range, would be most likely be susceptible via the field inducing current into the interconnect cables, not via pickup at a circuit card. The CS114 environment, conducted RF susceptibility, considers the MIL-STD-464C EME and on-board transmitter threats in the 2 to 30 MHz frequency range.

As noted in MIL-STD-461F, the base E-field threat levels present at subsystems and equipment may be tailored by the procuring activity based on particular situations. MIL-HDBK-235 is cited for guidance. The MIL-STD-461F RS103 50 V/m environment is pulse modulated with 50% duty cycle and a 1 kHz pulse rate. The MIL-STD-464C radiated environment for ground systems above 1 GHz is also pulse modulated, but with a duty cycle notable shorter than 50%.

For evaluation against the RS103 environment, the cable bundles must be representative of the intended installation. “Representative” equates to identical cable and wire cross-section, identical or electromagnetically equivalent connector assemblies, identical wire and cable shield properties (if shielding is applicable), and identical, or equivalent, shield and wiring termination, routing, and grounding at the connectors.

The equipment subject to the RS103 environment must be electrically bonded to the copper bench in a manner that represents how it is bonded (or not bonded) to the host platform. Key quantities to consider in equipment bonding include DC resistance, contact locations, bonding conductor material and geometry (if applicable), and the amount of surface area at bond between conductive surfaces.

The MIL-STD-461F RS103 environment requirements are also normalized to a condition where the cables under test are placed 5 cm above a conductive ground plane bench. Length may be limited to 10 meters if the installation cable is longer than 10 meters. If the length is unknown, a compliant default length of 3 meters is typically used, as this allows compliance to other baseline conditions stated in MIL-STD-461F.

The cables must also be terminated with loads to simulate the electrical properties (impedance, grounding, balance, and so forth) present in the actual installation.

Power leads are to be between 2 and 2.5 meters long and terminated into a line impedance stabilization network (LISN). Figure 2.3.1-3 shows a schematic of the LISN. The purpose of the LISN is to provide a platform representative power system impedance to the equipment or subsystem being tested or analyzed.

In general, the RS103 environment baseline for exposure of cable bundles is to have at least 2 meters of cable bundle, starting at the equipment connector, exposed to the field with the direction of propagation normal to the run of the cable bundle. Thus simulation models should be set up to provide at least 2 meters of cable bundle running perpendicular to the direction of propagation. Looping the cable back and

forth such that additional lengths run parallel to the direction of field propagation should be avoided. For each direction of propagation (there may be many if a complex cable harness is being analyzed) the field must be applied with both horizontal and vertical polarization, assuming the plane of the cable run and ground plane bench are horizontal. From a simulation standpoint, this may be done by running the simulation twice for each direction of propagation – once with horizontal polarization and once with vertical polarization, or combining polarizations for each propagation direction by using an E-field vector 45 degrees from horizontal, setting the E-field magnitude at sqrt(2) x required base level. However, this is often argued as a worst case test or analysis since, in practice, the system cables will only see one polarization being dominant at the baseline level – the component in the other polarization being much less. However, the maximum amount of pessimism would be limited to 20*log* (*sqrt*(2)) = 3 dB.

2.3.5 Radiated Susceptibility - Transient Electromagnetic Field - RS105 Environment Model

MIL-STD-464C states: "*The system shall meet its operational performance requirements after being subjected to the EMP environment. This environment is classified and is currently defined in MIL-STD-2169. This requirement (environment) is applicable only if invoked by the procuring activity. Compliance shall be verified by system, subsystem, and equipment level tests, analysis, or a combination thereof.*" Note that MIL-STD-2169 is a classified document. Often, if the EMP environment is applicable, subsystem and equipment specifications will contain detailed requirements with respect to required recovery time and actions and outputs during the recovery period. As an example, a mission display may be required to recover within 40 seconds after the EMP event and must never provide misleading or non-current data. The terms High-altitude Electromagnetic Pulse (HEMP) and Nuclear Electromagnetic Pulse (NEMP) are often synonymous with the term "EMP."

The RS105 requirement in MIL-STD-461F is an attempt to provide a representative unclassified compilation of various EMP environments that may be seen by subsystems and equipment in unshielded systems and platforms.

The RS105 requirement is technically applicable only to equipment enclosures, as the result of EMP onto cable bundles and power leads is covered under the generic CS116 environment. However, there may be instances where the installation cables are relatively short ($\leq$ 10 meters) and it may be more practical, in lieu of applying CS116, to subject the cable harness to the RS105 environment along with the equipment enclosure. Examples include soldier mounted systems and small vehicles. In these cases test or modeling with respect to the RS105 environment may be more appropriate. Hence a model of the RS105 environment for cables is included herein.

The RS105 environment is a radiated planewave with the characteristics shown in Figure 2.3.5-1. Figure 2.3.5-2 is a photograph a RS105 test of a small subsystem. Clearly, this setup will expose cables to the RS105 environment.

With respect to short cables, the RS105 environment is typically modeled with the cables 5 cm above a ground plane bench, as with the other MIL-STD-461F setups, with the plane wave propagation in the direction of the cable run and the E-field set normal to the ground plane. For complex cable harnesses, the model may include application of the field with multiple directions of propagation (each applied as a separate case), always with the E-field normal to the ground plane.

Often when the RS105 environment is to be applied to equipment or subsystem cables, the cable and equipment layout on the ground plane used for RS103 is directly used for application of the RS105 environment – a parallel plate transmission line plate is placed above the ground plane over the equipment and cables.

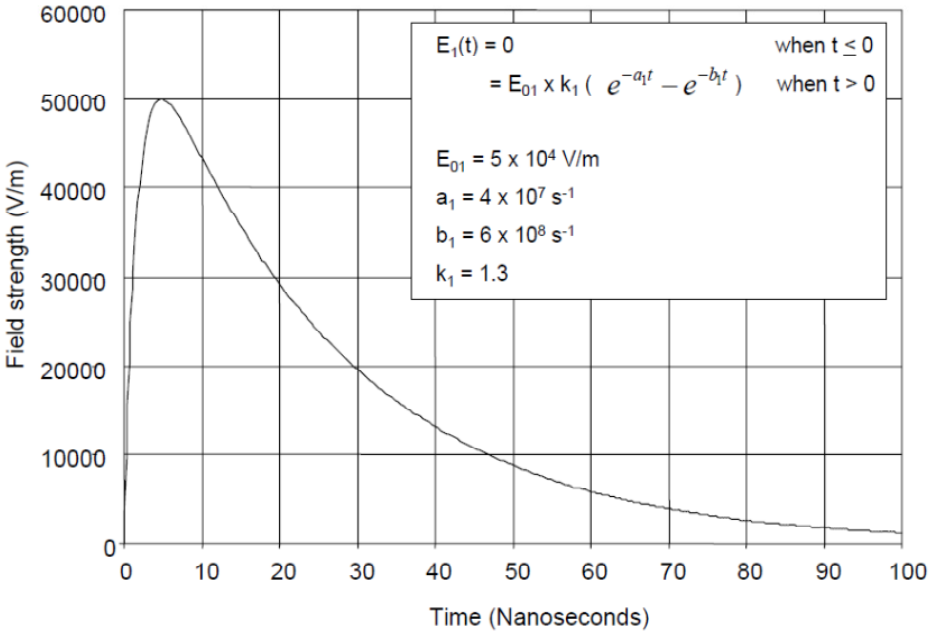

Figure 2.3.5-1. RS105 Waveform

From www.montena.com

Figure 2.3.5-2. RS105 Setup Example for a Subsystem

3. CABLE/CONNECTOR ASSEMBLY MODELING METHODOLOGY

The object of the cable/connector assembly modeling and simulation process described herein is to determine voltages and currents at key circuit interfaces resulting from the cable/connector assembly's exposure to the MIL-STD-461F environments described in Section 2. These voltages and currents can then be compared to the characteristics of the expected desired signal to allow determination of expected susceptibility or immunity to the environment.

With respect to the use of commercially available state-of-art electromagnetic effects simulation tools, the recommended modeling and simulation approach is to break up the model problem into entity blocks. The models for these entity blocks can be built as stand-alone items and merged together in a top level co-simulation framework using supported formats to allow interface between the entity blocks.

Entity blocks include cable harnesses modeled as a chain of transmission line matrices, connectors and mechanical aspects of shield and wire terminations modeled as a S-parameter blocks as a result of full-wave 3-dimension (3-D) EM simulations, and I/O circuit blocks consisting of discrete components, SPICE models and S-parameter blocks. "Probes," which allow measurement of voltages and currents, can be placed within I/O circuit blocks and at connection points between entity blocks.

Of course each of the electromagnetic environments, as described in Section 2 above, would be considered an entity block as well. However, only one at a time would typically be used.

The entity block approach allows model reuse and allows construction of models for various parts of the problem simultaneously and independently to provide greater throughput than previously realized before the availability of co-simulation features in electromagnetic effects analysis tools.

3.1 Model Entity Blocks

Figure 3.1-1 presents the various top-level entities, or sub-model blocks, that may be used in a co-simulation setup to determine the effects of the of MIL-STD-461F susceptibility environments applicable to cable/connector assemblies. Each entity block can be viewed as a separate stand-alone model. The entity models (blocks) interface via electrical connections where the block edges touch each other. Interconnection of "grounds" between blocks is implemented as electrical connections in the co-simulation setup as well. The interconnection of block "grounds" in the co-simulation setup may occur through networks built from resistors, inductors and/or capacitors to model the "real" aspect of grounding and bonding.

Table 3.1-1 provides a description and specification/build methods for each type of entity block that can be used in a co-simulation setup for the prediction of susceptibility with respect to the MIL-STD-461F environments as applied to cable/connector assemblies. The entity block descriptions, modeling methods and interfaces presented are compatible with the CST Studio Suite[4] simulation tool set. Other vendors offer tools with similar features and capabilities, although some of the semantics and problem solving specifics may vary slightly. CST Studio Suite was chosen for this effort due to its current in-house presence.

[4] CST Studio Suite is a collection of simulation tools that includes Design Studio, Cable Studio, PCB Studio, Microwave Studio and various time domain and frequency domain solver modules, all capable of interface with each other in a co-simulation environment.

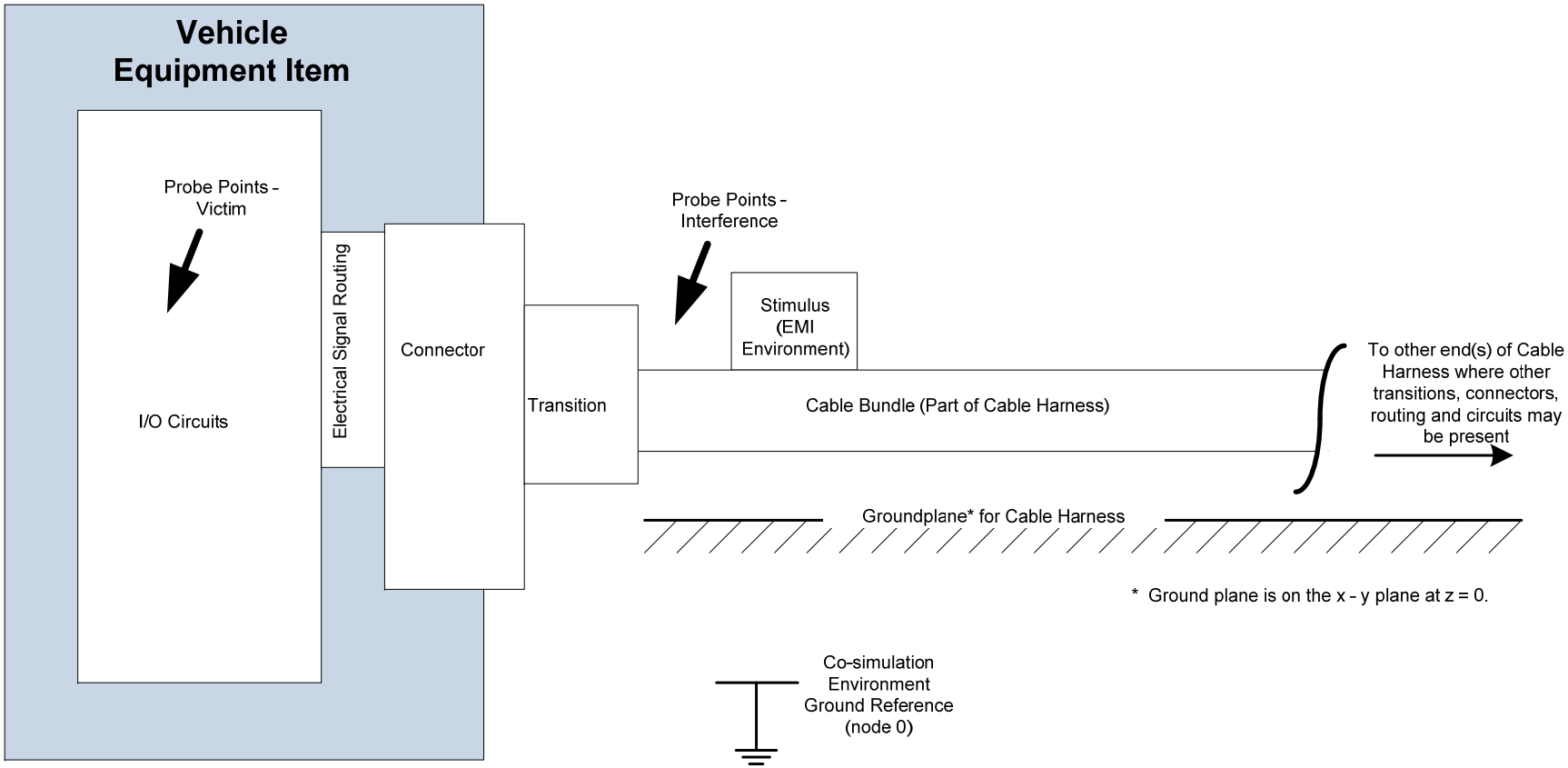

Figure 3.1-1. Model Entity Blocks

Table 3.1-1. Description and Specification of Model Entity Blocks

Entity Block	Description	Method of Specification	Notes
Cable Harness	The collection of wiring, to include wiring shields, that will be exposed to the electromagnetic environment, either directly or indirectly, as bounded and geometrically laid out above a ground plane per the conditions of MIL-STD-461F, or tailoring thereof.	Geometry entered into a 2.5-D cable EM simulator (e.g. CST Cable Studio) by specifying the following: Nodes: Points in 3-dimensional space that form a cable route path. Routes: Connected segments that form a path for a cable bundle to be placed on. Routes have two end nodes. Cables and Cable Groups: One or more conductors with a particular cross-section, which may include shields. Shields can be assigned a transfer impedance. Cable Bundle: Collection of one or more cables that share the same route and are electromagnetically coupled by default. Signal: A unique name assigned to each conductor in a cable bundle. Ground Plane: Conductive surface typically at z = 0. Additional Optional Items: Connector (ideal): Assignment of an ideal connector at ends of cable bundles to allow connection of signals. Junction: Ideal connection of pins from more than one connector.	After 2.5-D simulation, the cable harness will be presented in the co-simulation framework as a block with the terminals of the cable signals that do not connect to another cable signal within the cable model space. As with other conductors in a cable bundle, the shields are also assigned a signal name. A signal has two terminals: each terminal will connect to either one or more signal terminals within the cable simulation space, or, if unconnected, will be available as a terminal for external connection outside the cable model space. The Cable Studio tool supports the modeling of shielded cables. It does not have the capability to apply a shield over a cable bundle. Thus shielded cable bundles will be limited to one cable group – a cable group that is shielded. Capability exists for automatic computation of shield transfer impedance if shield details are entered.
Connector	Model of a real connector assembly that typically includes the part attached to the equipment item, the part attached to the cable bundle and the backshell/strain relief.	MCAD file import of geometry and/or manual entry of geometry followed by material property assignment in 3-D EM modeling tool (e.g. CST Microwave Studio). Result after 3-D simulation will be an S-parameter block.	The radiated environment is not presented to the connector.

Entity Block	Description	Method of Specification	Notes
Transition	Model of the interface between the constant cross-section cable bundle and the connector pins.	Model built from primitives in a 3-D EM modeling tool (e.g. CST Microwave Studio). A port is assigned to each signal and shield conductor (if applicable) at each end of the transition. Result after 3-D simulation will be an S-parameter block.	The radiated environment is not presented to the Transition.
Electrical Signal Routing	The routing inside an equipment item between the connector, transition or cable bundle interface, as applicable, to the I/O circuits of interest.	S-parameter block resulting from one of the following build and simulation activities. Note that a port is assigned to each signal and shield conductor at each end of the routing structure. Multiple methods of specification: 1) Model built using a cable harness a 2.5-D cable EM simulator tool (e.g. CST Cable Studio) 2) Model built using a 2-D or 3-D PCB EM simulator tool (e.g. CST PCB Studio) 3) Model built from primitives in a 3-D EM modeling tool (e.g. CST Microwave Studio).	The radiated environment is not presented to the Electrical Signal Routing.
I/O Circuits	Loads and terminations for conductors contained in a cable bundle which are not directly terminated to the connector or to the connector at the transition structure. Also includes networks that connect circuit grounds to 3-D cable harness problem space ground, as well as networks that connect to the co-simulation framework ground reference (node 0).	Electrical schematic items consisting of one or more the following entered in the co-simulation framework (e.g. CST Design Studio): 1) Passive components 2) Active components[5] 3) SPICE model blocks (active and passive devices)[5] 4) Passive S-parameter model blocks	SPICE model block files will have to be modified if it is not desired to have "node 0" in the SPICE model be coincident with the ground reference (node 0) of the co-simulation framework. The reference of the S-parameter block will be the ground reference of the co-simulation framework.
Stimulus - CS	Application of MIL-STD-461F CS114, CS115 or CS116 environment to cable harness.	Electrical schematic items, including probes, as described in Sections 2.3.1, 2.3.2 or 2.3.3, inserted into the co-simulation framework (e.g. CST Design Studio) between a cable bundle's end node and transition block.	The stimulus is typically applied to various combinations of cable conductors at each equipment item connector-cable interface node, in turn, per Sections 2.3.1 through 2.3.3.

[5] Some simulators, such as CST Design Studio, cannot perform successfully perform transient analysis in a co-simulation environment unless particular passivity criteria is met. In these cases, active components may need to be represented as passive linearized network.

Entity Block	Description	Method of Specification	Notes
Stimulus - RS	Application of MIL-STD-461F RS103 or RS105 environment to cables within the cable simulation space.	Planewave inserted into the cable simulation space (e.g. CST Cable Studio) per the conditions stated in Sections 2.3.4 and 2.3.5.	The RS103 stimulus is applied twice – y-direction propagation, hor. & vert. polarization. The RS105 stimulus is applied twice – propagation in the x and y directions, vertical polarization.

It is important to realize that not all of the entity model blocks listed in Table 3.1-1 are required to model a particular cable/connector harness. For instance, if the pins of a connector are present on the same circuit card as the I/O circuits of interest, and the routing is, from a practical sense, electrically insignificant, the Electrical Signal Routing block would not be needed.

It should also be noted that multiple entity blocks may be combined into one block if they are connected and the modeling format for both are the same. For example, at the end of complex cable bundle, conductors of twisted shielded pairs may become untwisted as they transition to the connector pins, and shields may be terminated to the connector backshell via wire pigtails. This transition may be modeled as sections of cable with varying cross-sections, or it may be modeled as a set of conductors and insulators in 3-dimensional space in the same manner as the connector assembly. If the later method will be used, it may be easier to build the connector and transition into one combined 3-dimensional entity block to represent the whole structure.

Note that Figure 3.1-1 only shows one end of a cable bundle. Typically, a cable harness applicable to the MIL-STD-461F environments defined in Section 2 will have at least one other equipment item or bulkhead panel, complete with a connector, I/O circuits, etc., connected to the other end.

3.2 Grounds and Grounding

A co-simulation problem may contain several "grounds." The details of the electrical bonding between these grounds can greatly influence the ability of a cable assembly to provide immunity to the electromagnetic environment. Hence it is extremely important to capture the grounding and bonding attributes of the assemblies being modeled. Ideally, every item (objects, wires, cables) would be modeled in a 3-D electromagnetic space. However, this is simply not practical. But, with some insight from experienced EMC practitioners, reasonable modeling approximations can be made. (There will be some illustrative examples included in the following sections that show this.)

3.2.1 CST Studio Suite Electromagnetic Effects Simulator Overview

The most important item to understand is how the grounding scheme is set up in the co-simulation framework. The setup of entity block ground in the CST Studio Suite co-simulation framework will be presented. Other co-simulation tools will utilize similar grounding setups.

CST Studio Suite is a set of embedded simulation modules that are integrated for use with a common graphical user interface, or "front end," that have the capability to operate together in a co-simulation setup. CST, from a sales standpoint, labels the modules as "studios," each focused on a particular type of simulation problem. The various "studio" modules, each which can be purchased separately, include Microwave Studio, Design Studio, PCB Studio, Particle Studio, Mechanical Physics Studio and Cable Studio. Additionally, some of the modules provide the capability to use multiple solvers, of course each being a separately purchased item. For example, Microwave Studio can support Time Domain, Frequency Domain, Integral Equation and Eigenmode solvers.

Simulation problems involving the application of MIL-STD-461F susceptibility environments to cable/connector assemblies require the use (purchase) of the following CST Studio Suite components:

(1) Frontend
(2) Design Studio
(3) Cable Studio
(4) Microwave Studio
(4a) Time Domain Solver.

3.2.2 Grounding within CST Studio Suite

Cable Studio is designed to be used as an embedded module within Design Studio. Design Studio is basically a schematic entry, results presentation and circuit simulation tool which provides the framework for a co-simulation environment. Voltage and current probes are inserted into Design Studio to allow monitoring of voltages and currents. Voltage and current probes cannot be inserted into Cable Studio or Microwave Studio.

Cable Studio allows the user to define complex cable harnesses with objects, such as a ground plane, which may be present in the cable's environment. Per MIL-STD-461F, it will be assumed herein that the cable harness is routed above ground plane. During the modeling process, Cable Studio generates transmission line matrix equivalent circuits from the geometry of the cable and surrounding objects. The result is a "cable" block in Design Studio that provides terminals for connection to the cable harness's terminal conductors. Terminals for connection to the ground plane or other non-cable conductors in the cable harness's problem space at a particular location may also be made available. These locations are known as "connect to 3-D" nodes.

In Design Studio, cable block terminals can be connected to circuit elements, SPICE model blocks, S-parameter (Touchstone) blocks and IBIS blocks to complete the co-simulation model. It should be noted that the connector and transition entity blocks are created by modeling these structures in Microwave Studio and importing them into Design Studio as an S-parameter block.

The circuit ground in CST Design Studio is the reference ground for the co-simulation environment and is hence referred to herein as "node 0." It is also the "node 0" that is inherent in SPICE model files. S-parameter blocks in Design Studio, whether imported from electronic component S-parameter files or from a Microwave Studio model, are also referenced to the Design Studio node 0.

It should also be noted that the metal structures, such as ground plane under the cable harness, in the Cable Studio problem space are also virtually referenced to the Design Studio node 0. Of course grounded nodes (connect to 3-D) allow connection to the metal structure at the node's location either directly, or indirectly through electronic components, to the Design Studio node 0 reference ground. Hence careful planning is required if it is desired to simulate "floating" interface circuits or returning cable shield currents through the cable's reference ground plane.

Figure 3.2.2-1 is a notional diagram showing how various blocks and circuit elements for a simple 3-conductor unshielded cable harness routed over a ground plane may appear in Design Studio. For simplicity, the connectors on the cable were deemed insignificant and thus not included. Also shown in this figure are the contents and grounding within the SPICE and S-parameter blocks that interface with the cable harness. The co-simulation in Design Studio allows determination of the voltages and currents at P1, P2 and P3 as a function of the current at P1.

In this particular example, the model of the three microstrips above a ground plane was set up in Microwave Studio with the S-parameter ports connected between strip ends and the ground plane below them to result in a 6-port block. The other S-parameter block, which is from an RC network built on top of a ground plane, was a Touchstone file output from a vector network analyzer measurement. The SPICE block is typical of what is provided by a parts vendor. By default, node 0 (circuit ground reference) within the SPICE model is not passed directly as a block terminal, but is automatically connected to the Design Studio ground node 0 reference. The same is true for the reference ground used for the ports' references in the S-parameter blocks – that reference ground is automatically attached to the Design Studio reference ground. In this example, injected interference current at P2 will not return via the cable environment's ground plane. This may cause incorrect results if this is not representative of the compliance test setup.

Figure 3.2.2-2 is a notional diagram of the same cable and "equipment interface" model as shown in Figure 3.2.2-1, except that the interface on the left side of the cable is referenced to the cable environment's ground plane at the left end of the cable via a grounded node. Hence the return current resulting from current P2 will flow through the cable environment's ground plane. Note that the addition of this feature does add complexity to the simulation in that a reference ground plane and two additional ports need to be added to this electrically long 3-D microstrip model. In the case of the microstrip structure, the added ground plane must be far enough away from the three strips such that influence on coupling and characteristic impedance is minimal, but not too far away to make the model space unbearably large, which may result in very long simulation times.

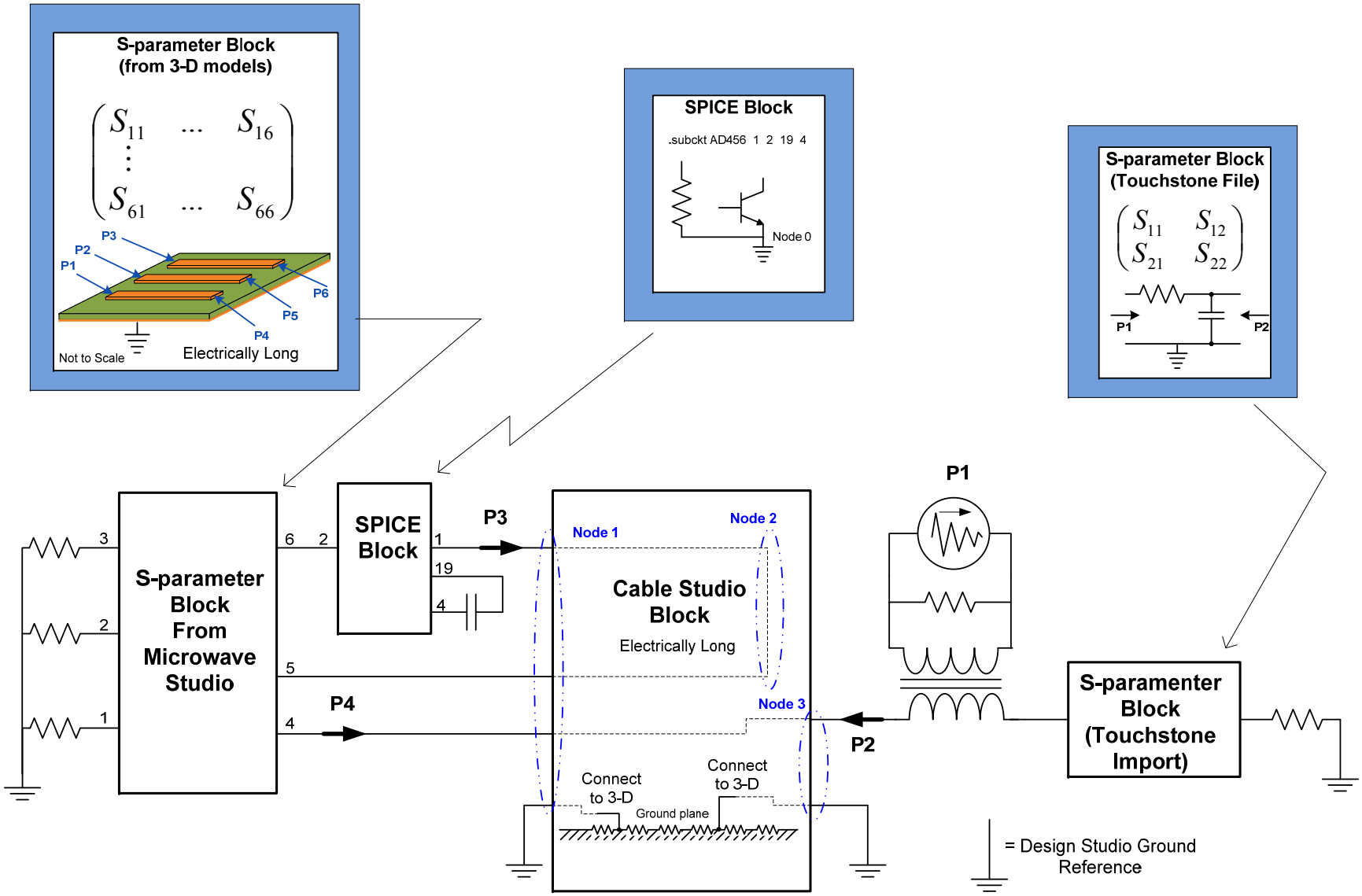

Figure 3.2.2-1. Grounding Scheme #1 in Co-simulation Environment for Simple 3-Conductor Cable above Ground Plane

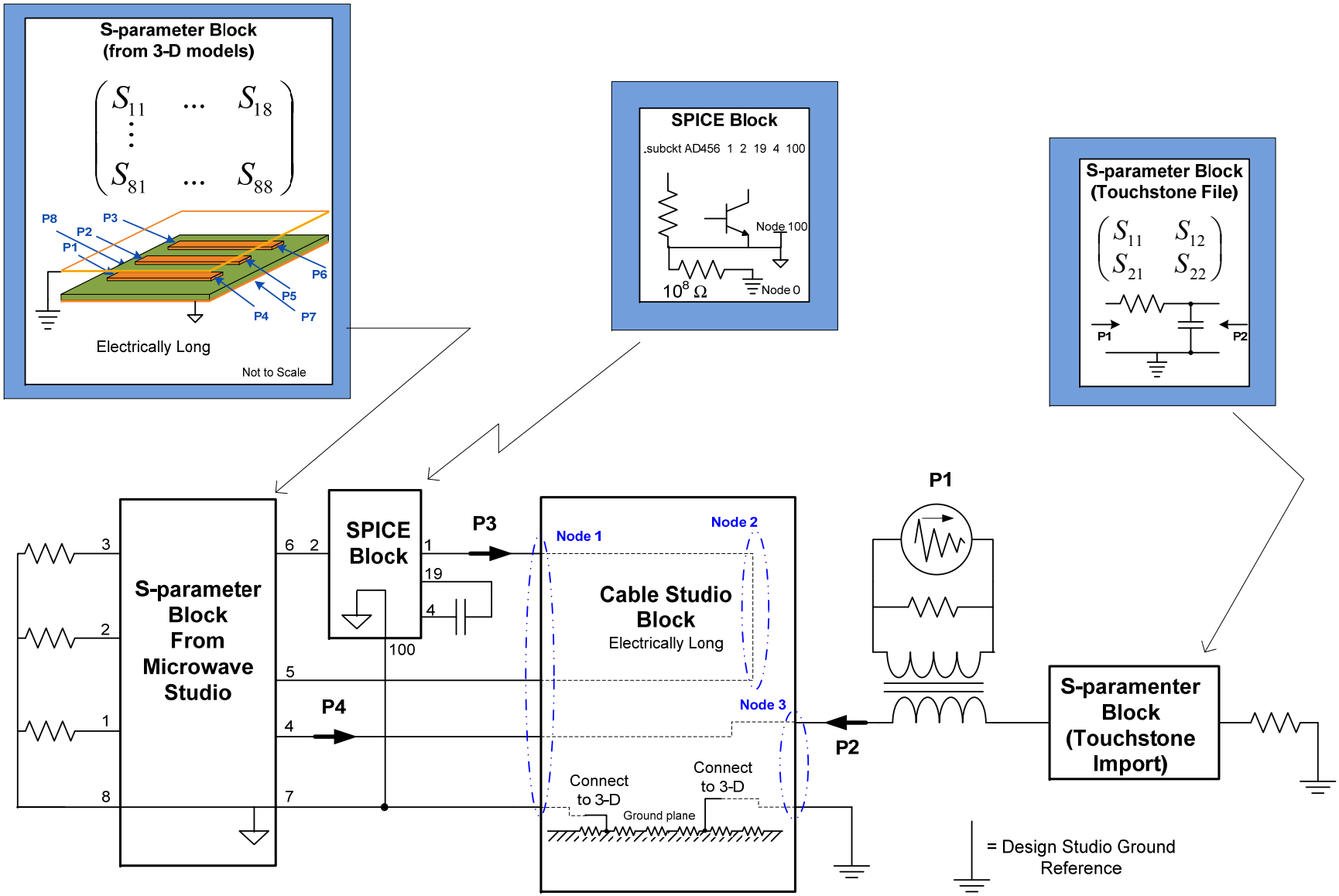

Figure 3.2.2-2. Grounding Scheme #2 in Co-simulation Environment for Simple 3-Conductor Cable above Ground Plane

The SPICE Block file will also have to be modified to allow access to the circuit's reference. In this example, this is done by replacing the node "0" node connections with connections to node "100," or some other unused node number, and then adding a net consisting of a high impedance between node 100 and node 0. When compared to the SPICE block in Figure 3.2.2-1, we note that the new block has five terminals free for connection instead of four.

As a final note to the example shown in Figure 3.2.2-2, we do observe that there is a hard connection to the Design Studio co-simulation reference ground on the right side of the cable. This is highly acceptable when the components involved are electrically short, as one would expect to be the case for the injection transformer and RC termination at the right end of the cable. Although not explicitly documented in CST Studio user manuals, experience has shown that the Cable Studio block should have a hard connection to the co-simulation framework's reference ground to ensure a greater chance of simulation stability.

3.3 Cable Harness Definition

A vehicle will typically contain many complex cable harnesses and equipment items. The vehicle, with the complete collection of cable harnesses and equipment items is applicable to the MIL-STD-464C electromagnetic environments. However, from an equipment and cable/connector assembly design and procurement standpoint, the MIL-STD-461F environments are applicable at the equipment and subsystem level, with the cables connected to this equipment being applicable to the same MIL-STD-461F environment as the equipment items. MIL-STD-461F contains three environments where the environment is applied to the cables at the equipment connectors. These environments, CS114, CS115 and CS116 are discussed in Section 2. Additionally, the MIL-STD-461F RS103 and RS105 radiated environments may be applied to the cables harness as well. These environments are also discussed in Section 2.

It is the MIL-STD-461F environments applicable to the cable/connector assembly that is the focus of this effort. Hence a whole vehicle cable harnesses will not be included into one model problem. Rather, only the cables connected to a procurable line replaceable equipment item or subsystem, which typically consists of one to six equipment items, will be included in a particular model problem. Furthermore, the cable lengths and positioning above a ground plane will be per the MIL-STD-461F requirements. With this in mind, the Cable Harness entity block should be built to emulate a MIL-STD-461F test setup.

3.3.1 Ground Plane

Cable harness definition starts with defining the ground plane. Typically, the ground plane will be defined as being normal to the z-axis at z = 0.

3.3.2 Nodes

"Nodes" are points in 3-D space that represent the ends of a cable bundle and the points where the cable bundle run changes directions. The z-coordinate of nodes is typically 50 mm per the "5 cm above the ground plane" requirement stated in MIL-STD-461F. However, since cable cross-sections are centered on nodes, the z-coordinate may have to be increased by the cable's cross-section radius if it is greater than 5 mm to allow tolerable compliance with MIL-STD-461F cable height conditions.

3.3.3 Segments, Traces, and Routes

A "segment" is defined as a *path* between two nodes. A "trace" is a **path** that connects three or more nodes. A "route" is a *path* defined as a set of contiguous segments or traces.

3.3.4 Cables and Cable Groups

A "cable" is a finite length of a set of one or more conductors with insulators and/or shields, as applicable, possessing a particular cross-section. CST Cable Studio contains templates for four types of cable cross-sections: single wire, coax, ribbon and twisted pair. Conductor and insulator characteristics and dimensions can be defined for each type to define a particular cable. For coax cables, CST Cable Studio allows the definition of circular and wrapped shields (screens) of the braided and solid varieties. For braided shields, CST Cable Studio allows use of a simplified model where the use specifies transfer inductance, resistance and capacitance, entry of Kley's model information, or entry of measured results for the determination of transfer impedance.

Basic "cables" can be combined, with layers of insulation and shielding added to build "cable groups." It is at the cable group level where gross overshields are added.

3.3.5 Cable Bundles

A "cable bundle" is a set of one or more cables or cable groups which share the same route and thus electromagnetically coupled be default. "Cables" and "cable groups" are laid on to "routes." CST Cable Studio has the capability to automatically bundle cables and cable groups that share a route.

From a MIL-STD-461F cable environment simulation standpoint, a "cable bundle" will typically be associated with a physical equipment connector at one or both ends. Thus an equipment item containing three connectors will require a cable harness that possesses at least three cable bundles for interface. The MIL-STD-461F CS114, CS115, and CS116 environments are typically applied on an equipment connector basis.

3.3.6 Cable Harness

A "cable harness" is the collection of cable bundles within a Cable Studio cable block. It is the complete cable harness that will be exposed to MIL-STD-461F RS103 and RS105 planewave source environments.

Electromagnetic coupling between cable bundles within a cable harness can also be considered in CST Cable Studio when the Transmission Line Matrix (TLM) meshing parameters are set up for specification of a "maximum search distance." In general, for the MIL-STD-461F focused cable analysis and simulation, coupling between cable bundles is typically of little concern from a practical standpoint.

3.3.7 Shielded Cable Bundles

CST Cable Studio does not offer the capability of adding an overshield to a cable bundle as it is laid on to a route. Thus if it is desired to have a bundle with an overshield, that bundle will consist of only one cable group; it is that cable group that will contain the overshield.

3.3.8 Signals and Signal Terminals

When cables and/or cable groups are laid on to routes, a unique "signal" name is automatically formulated for each conductor using that route. By default the signal name is a concatenation of the following items, in sequence, separated by an underscore:

- route
- cable or cable group
- instance of the cable or cable group if a particular cross-section is used more than once on a route
- conductor number within the cable or cable group.

Unfortunately, the default signal names can be long and unwieldy. However, they can be renamed by the user. And, nodes, routes, cables and cable groups can be manually named at the time of creation to provide optimal description.

Signals have two "terminals." By default, terminals have names that start with the terminating node name followed by the signal name.

Note: Cable and cable group shields (screens) conductors are considered "signal conductors" and will thus have signal names, as well as possessing a terminal at each end.

3.3.9 Connectors, Plug-ins, Pins, and Junctions

Within the CST Cable Studio, terminals for signals contained in cable bundles that make up a cable harness are joined via "connectors." These "connectors" are actually electrically ideal connections as opposed to an electromagnetic representation of the physical connector that may be present in a real cable harness. In most situations with respect to a frequency range of interest limited to 400 MHz, this is acceptable for a typical junction within a cable harness. However, if desired, there are various methods to insert a 3-D electromagnetic model of a physical connector into the simulation – most commonly it is built and modeled with ports that are connected to cable signal terminals in the co-simulation framework. It can be also inserted as a 3-D structure model in the Cable Studio environment as well, but, the former is usually easier. Of course the later will be required if they junction is electrically significant in the sense that it realistically should be exposed to the radiated interference environments.

The CST Cable Studio "connectors" can be subdivided into multiple "plug-ins" to allow more straightforward grouping of signals.

The use of CST Cable Studio "connectors" starts with placing one or more "connectors" at the node where signal terminals at the ends of cable bundles need to connect. Assignment of multiple "plug-ins" can be made within this "connector" if desired. (Per the CST Cable Studio convention, there will always be at least one plug-in per connector.) Signal "terminals" present at the connector's node are then **linked** to connector plug-in "pins." Multiple signal terminals may be linked to a connector plug-in pin, as this may be a simple way to connect signal terminals from different cable bundles that come together at a node.

There are two methods to connect signal terminals of interfacing cable bundles at nodes within a cable block. As alluded to above, the first method is to simply define one connector at the connection node and link terminals that need to be linked to a connector plug-in pin. The second method would be to define a "connector" at end of **each** cable bundle and link the bundle's signal terminals to the connector plug-in pins. A "junction" would then be defined to *link* connector plug-in pins. In summary, "junctions" link connector plug-in pins. Connector plug-ins pins are linked to signals.

3.3.10 Cable Block I/O

A signal terminal that does not connect to another signal terminal via connection to a common connector plug-in pin or via a "junction" will be made available as a cable block I/O when it appears in the Design Studio co-simulation framework. It will be presented with the same terminal name as used in Cable Studio.

3.3.10.1 Connection to 3-D

In a practical sense, connection of circuit elements, cable shields and cable signal conductors to the ground plane are often made where the cable will interface to physical connectors and equipment. Hence CST Cable Studio provides the opportunity for connection to the ground plane at a particular node (physical location) through the use of a "grounded node" designation option when the node is defined. A "grounded node" will present a cable block I/O terminal that connects to the ground plane at the node location when presented in the Design Studio co-simulation environment. As an example, nodes 1 and 3 in Figures 3.2.2-1 and -2 are "grounded nodes" which allow connection to the ground plane at their location.

3.4 Cable Shield Transfer Impedance

Computational methods to determine the coupling of an electromagnetic environment through shielded cables make use of the shield's transfer impedance quantity.

For frequencies below 1 GHz, the quality of a cable shield is typically defined by its transfer impedance. The transfer impedance is defined as the ratio of the open circuit voltage developed between the shielded conductor and the shield to the current flowing on the shield. The units for transfer impedance is ohms per meter. At low frequencies (typically below a few 100 kHz) the transfer impedance is a resistive quantity. As frequency increases, the transfer impedance is dominated by an inductive component. Thus transfer impedance a complex quantity that varies with frequency.

Below 1 GHz, the transfer impedance of single layer braid cable shields can be simply modeled as a series resistance and inductance. Most electromagnetic effects analysis tools, including CST Cable Studio, allow the entry of a per unit resistance and per unit inductance to describe transfer impedance. This simple model is often adequate for single layer braid shields for analysis over the 10 kHz to 400 MHz frequency range. It should be noted from a practical standpoint that resistance itself is often a function of frequency due to the skin effect, which may be of concern if high accuracy is needed for analysis below 1 MHz. Table 3.4-1 lists transfer impedance in terms of resistance and inductance for a few popular coax cables with braid shields.

Table 3.4-1. Simple Transfer Impedance Model Parameters for Popular Braid Coax Shields

Cable / Shield	Xfer Resistance	Xfer Inductance	Optical Coverage
RG-6 Inner Shield	6.6 mΩ/m	0.42 nH/m	95.6
RG-6 Outer Shield	7.5 mΩ/m	0.36 nH/m	96.2
RG-11	4.0 mΩ/m	0.25 nH/m	96.0
RG-58	14.2 mΩ/m	1.0 nH/m	93.6
RG-213	4.0 mΩ/m	0.25 nH/m	96.0
RG-174	36.5 mΩ/m	2.3 nH/m	86.3
RG-218	1.2 mΩ/m	0.07 nH/m	98.3
RG-316	26.8 mΩ/m	0.88 nH/m	92.3

Transfer impedance of single layer braided shields can more accurately be calculated using Kley's model / method[6]. Many EMC focused cable analysis simulation tools, including CST Cable Studio, offer the option of computing transfer impedance using Kley's model. Kley's model allows computation of shield transfer impedance a function of the braid's physical and geometrically features, such as the shield

[6] Details on Kley's model and method for transfer impedance computation can be found in *EMC Analysis Methods and Computational Models* by M. Tesche, et al., published by Wiley Interscience, New York. 1997.

diameter, braid angle, filament wire size, number of filaments per carrier and the number of carriers. Alternatively, some of these quantities can be related to optical coverage, which may be entered instead to allow computation of transfer impedance. Figure 3.4-1 illustrates braid shield terminology as it relates to Kley's model. Figure 3.4-2 shows a screenshot from Cable Studio for computation of transfer impedance via entry of Kley's model parameters for the RG-316 shield, noting the result could be closely modeled using the series resistance and inductance values given in Table 3.4-1 for RG-318.

The transfer impedance of shields containing foil, foil-braid combinations (Figure 3.4-3), or multiple layers of braid can only practically be determined by measurement. Figure 3.4-4 shows measurement data for shields on some popular data cables containing foil based shields. Figure 3.4-5 shows transfer impedance for some popular coax cable shields which contain one or two layers of braid shielding based on measurement. Note the downward slope in impedance for the RG-11U and RG-223U cables in the 1 MHz frequency region. This is due to the skin effect.

Transfer impedance can be measured using methods contained in IEC 62153-4-4, and other similar standards, which basically call for the injection of current at particular frequencies on to an electrically short section of cable shield while measuring the resulting voltage on the shielded conductor using a vector network analyzer with a special test fixture. Most computational electromagnetic simulation and analysis tools accommodate the use of measurement data by allowing the entry of shield transfer impedance as a set of complex impedance versus frequency data points, or a DC resistance and transfer inductance quantity.

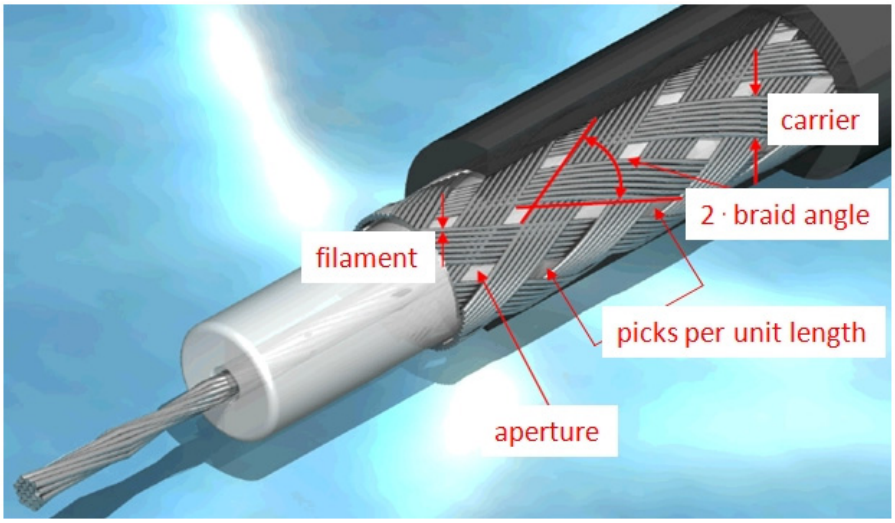

The relationship between the three parameters can be expressed in algebraic formulas:

D: Diameter under the braid (defined by the isolator below)
d: Diameter of a single filament
N: Number of filaments in each carrier
C: Number of carriers

F: Fill factor
α: Braid angle
P: Picks per unit length
O: Optical coverage

$F = N \cdot \mathbf{P} \cdot D / \sin \boldsymbol{\alpha}$;

$\mathbf{O} = 2 \cdot F - F^2$;

$\tan \boldsymbol{\alpha} = 2\pi \cdot (D+2d) \cdot \mathbf{P}/C$;

Figure 3.4-1. Terminology for Braided Shields

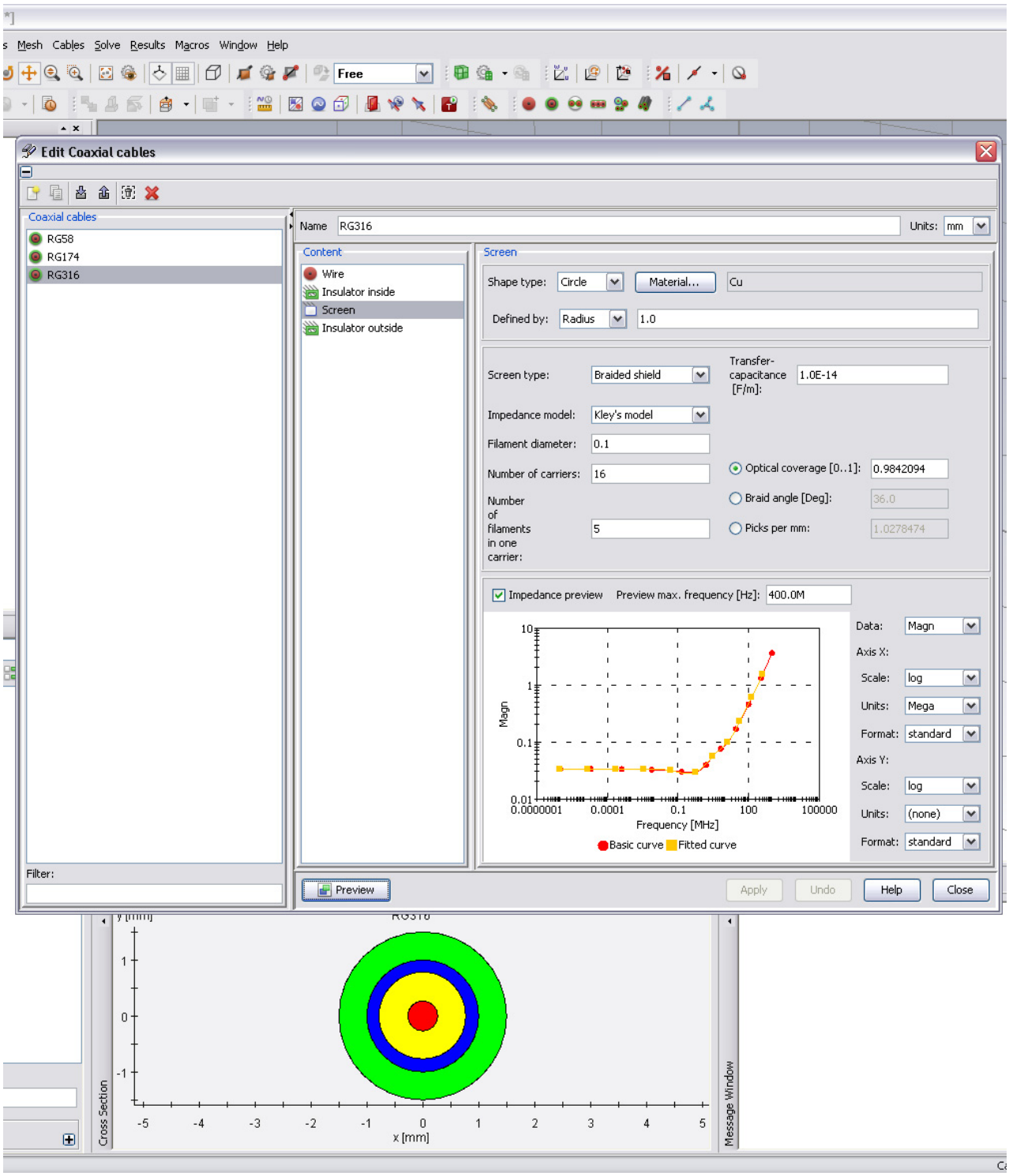

Figure 3.4-2. Screenshot Showing Uses of Kley's Model in Cable Studio

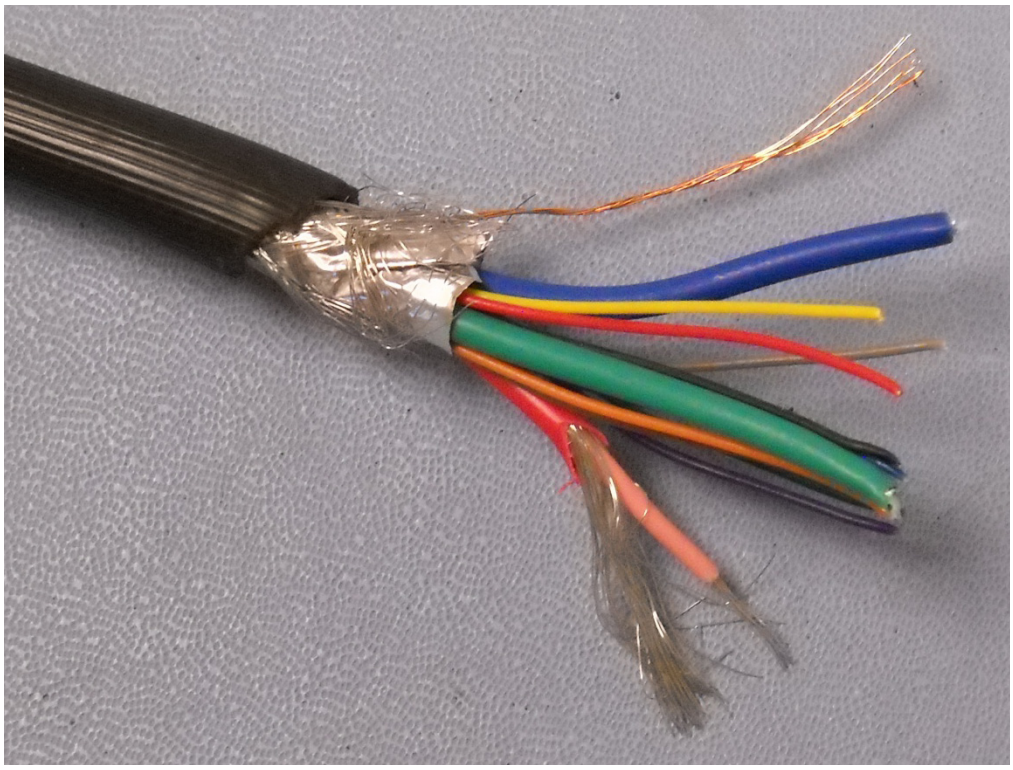

Figure 3.4-3. Cable with Combination Foil and Braid Shield

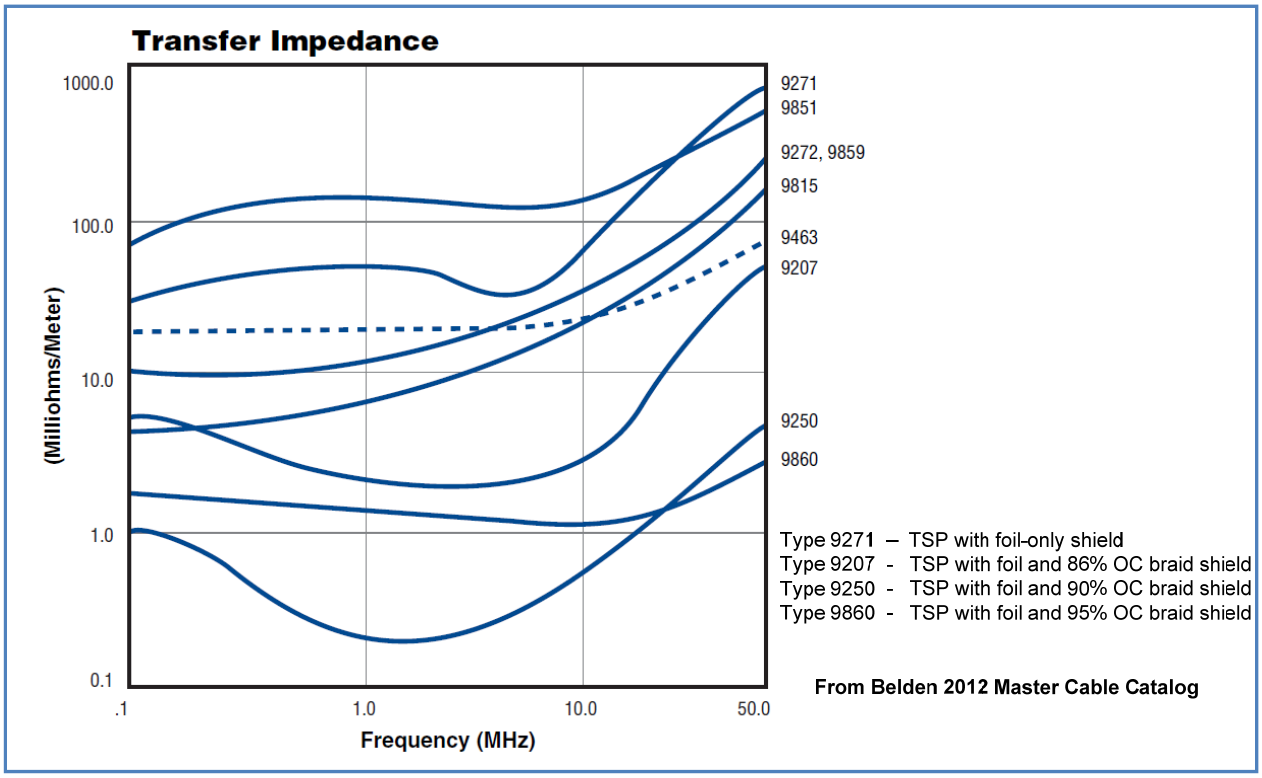

Figure 3.4-4. Transfer Impedance of Shields on Various Belden Data Cables Containing Foil

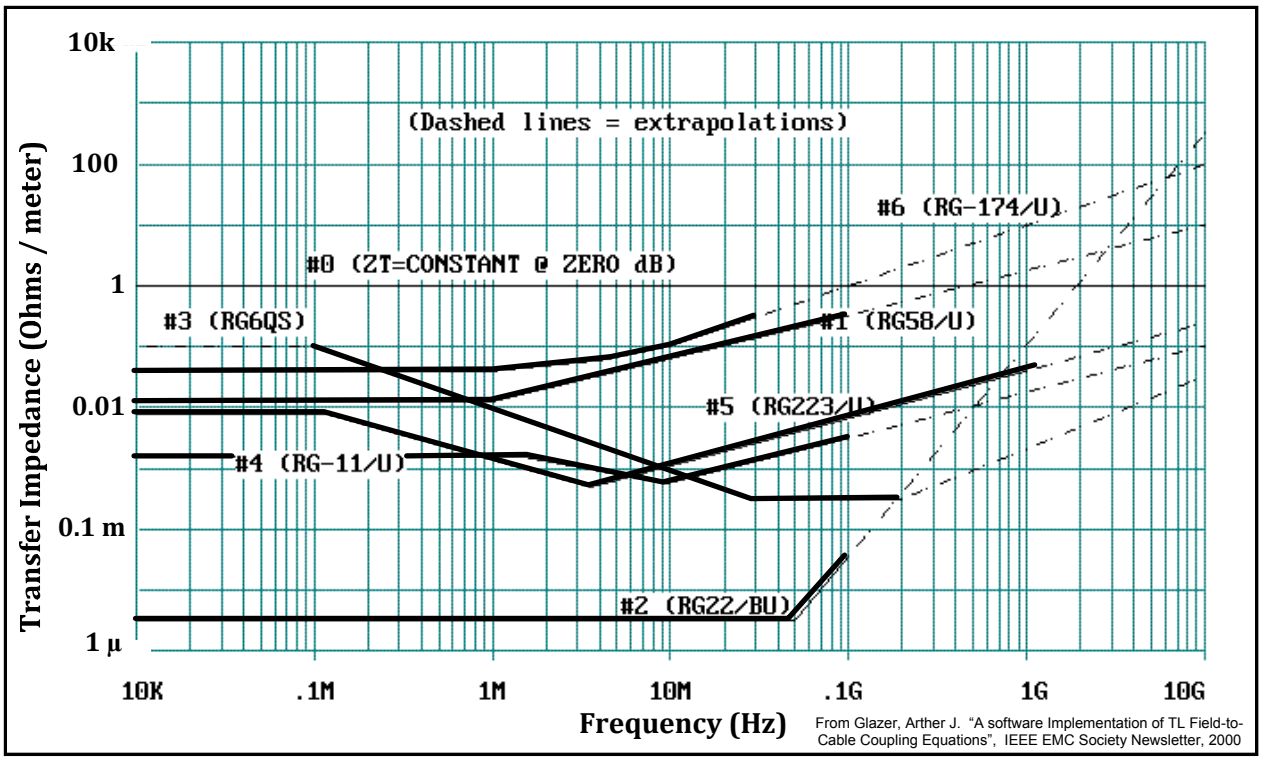

Figure 3.4-5. Transfer Impedance of Shields on Popular Coax Cables Utilizing Braid-only Shields

4. MULTI-BRANCH CABLE EXAMPLE

To illustrate the concepts of breaking an EMC simulation model into entity blocks and the subsequent construction of these blocks for the application of MIL-STD-461F cable related susceptibility environments described in Section 2, an example centered on a multi-branch subsystem cable harness is presented.

Figure 4 -1 shows a compliance test setup notional drawing that may appear in an EMI compliance test procedure for a subsystem applicable to MIL-STD-461F EMI susceptibility requirements. This particular subsystem contains three Line Replaceable Units (LRU). LRU 1 interfaces with the vehicle platform to obtain prime power. It processes video and supplies conditioned power at the appropriate voltage to LRU 2 and LRU 3. LRU 2 is a remote video display which obtains video from LRU 1 via a balanced digital video interface and video overlay data via an Ethernet interface. LRU 3 is a remote video camera that provides unbalanced composite NTSC analog video to LRU 1, where it is subsequently digitized.

It should be noted that the test setup shown in Figure 4-1 specifically shows application of the CS114, CS115 and CS116 environments to the LRU 1 signal cable. This setup, with the current probes removed, is also applicable to the application of the RS105 environment to the three LRUs (if the planewave generating structure is added above the ground plane), as well as RS103 applied to LRU 1 and LRU 2. To be applicable to RS103 for LRU 3, the positions of LRU 2 and LRU 3, and associated cables, would have to be swapped.

For brevity, the complete simulation and analysis will be only shown for the CS114 environment as applied to LRU 1. Application of the CS115 and CS116 environments will be similar, except the CS114 injection setup is replaced with the CS115 or CS116 injection models as shown in Section 2, and, the simulation is performed in the "Transient Simulation" mode, as opposed to the "AC Simulation" mode as for CS114. It should be noted though, that it may also be possible, or even preferred, to perform the CS115 and CS116 simulation and analysis using "AC Simulation" with Fourier Transform post-processing. "AC Simulation" effectively applies the stimulus and presents the results in the frequency domain. "Transient Simulation" effectively applies the stimulus as its time domain representation and presents the results in the time domain as well.

4.1 Focus on EMI Compliance

In this particular situation, the subsystem consisting of three LRUs is subject to MIL-STD-461F environment compliance testing per the five environments presented in Section 2. The diagram in Figure 4-1 specifically illustrates the set up for injection of the CS114, CS115 and CS116 environments on to Cable 1 at LRU 1. For this example, it assumed that the power input is sufficiently isolated from the LRU 1 cabled Input / Output. This is often a valid assumption for well-shielded equipment items that contain a separate power input connector and that are bonded to a ground plane.

All simulation modeling needs to start with an understanding of the environments and how they are applied and measured (see Section 2) and the specific compliance test setup. In the end, we design to "pass the test." Anything short of passing the test is non-compliant and may result costly redesign, as well as delivery delays. Passing the test with great margins may present an overdesign at the expense of increased system cost, weight and reliability. Thus the best way to most efficiently pass the test is to know what is on the test – understanding the requirements, equipment arrangement, grounding and bonding particulars, cable details, etc. Just as important as understanding these aforementioned items, the criteria for pass/fail with respect to the susceptibility environments must be fully defined.

Pass/fail criteria for the EMI susceptibility environments is often first defined at the equipment or subsystem level, and may vary between the applicable EMI environments to be applied. Equipment and system level pass/fail criteria typically includes statements such as: "performance shall not degrade beyond specified performance parameters," "the information presented on the display shall always be correct and readable," "display blanking is allowed during the application of the transient, but the correct image must automatically reappear after blanking within 3 seconds after the transient" and, "the subsystem shall not present hazardous or misleading information." These criteria are all centered on the end user and are not very easy to quantify or present in a simulation environment, as the simulation environment will present outputs in the form of electrical quantities. Thus for simulation with respect to interference applied to cable assemblies, electrical thresholds of susceptibility must be defined, typically at the connector pins or at the output of the EMI filter between the connector pins (the filter input) and I/O circuit (the filter output). The thresholds of susceptibility will be functions of the desired signals' characteristics, acceptable signal-to-noise ratios, and of course, the interference level presented on top of the desired signal by the environment. The end result will also consider time coincidence. For example, if the interference is only transient in nature, a loss of a small amount of data or signal become unnoticeable if data buffering and/or error detection and correction are part of the interface design.

Electrical thresholds of susceptibility may equate to a particular common mode or differential mode voltage and current expressed as a function of frequency in the case of the CS114 and RS103 environments. In the case of the CS115, CS116 and RS105 environments, the electrical thresholds of susceptibility may equate to a peak common mode or differential current or voltage, or a maximum allowable time for the presence of a particular common mode or differential mode transient voltage or current. Some basic circuit analysis is typically required to determine these thresholds. Of course the results must be analyzed with respect to thresholds for component damage as well, especially for the CS116 and RS105 environments.

When the interference presented to victim circuits is greater than the susceptibility threshold, failure due to EMI can be expected. Typically, for design confidence, a 10 dB to 20 dB margin (factor of 3x or 10x for voltage and current) should be added for simulations of the type described herein.

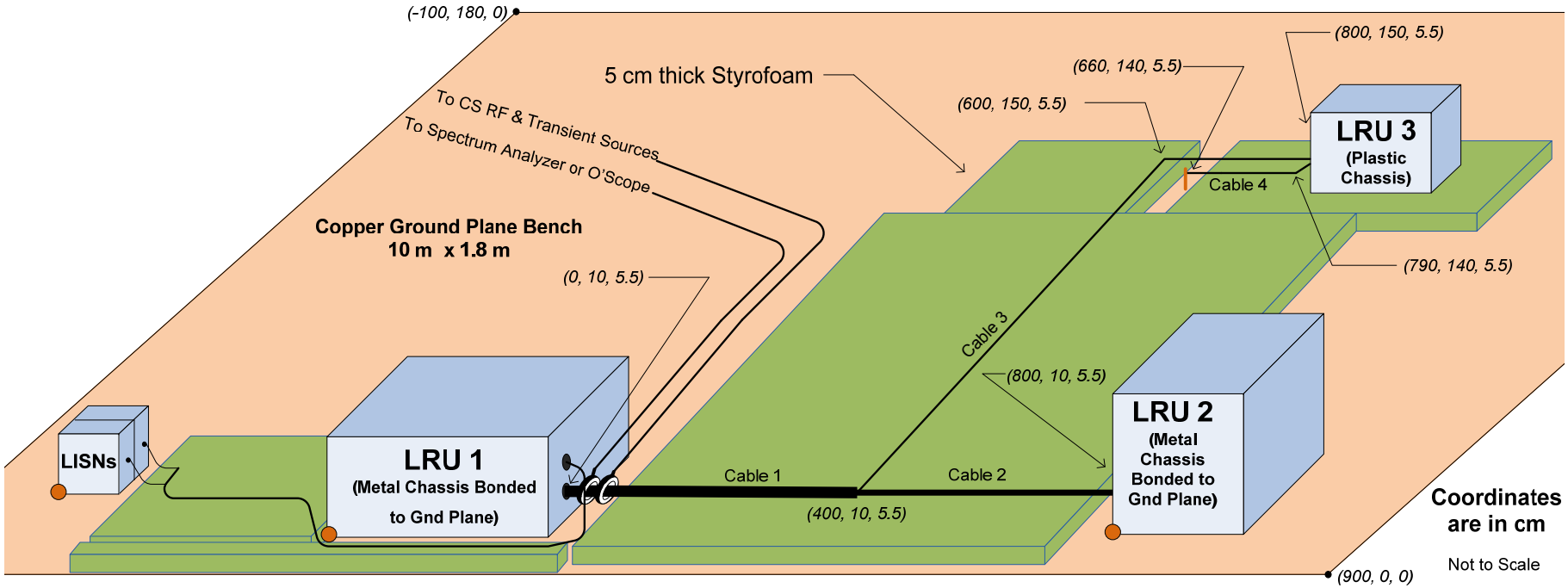

Figure 4-1. EMI Test Setup for CS Injection On to Cable 1 at LRU 1

4.2 Example Compliance Test Setup Specifics

With respect to the MIL-STD-461F example presented in Figure 4-1, the following is noted:

- The subsystem is mounted on top of a 10 meter by 1.8 meter copper bench in a manner to allow compliant testing of cable bundles 1 and 2. For application of the RS103 environment with respect to cable bundles 1 and 2 being applicable, the plane wave is applied in the *y*-direction. For application of the RS105 environment, the plane wave will propagate in the x-direction. The setup would have to be rearranged for testing of cable bundles 3 and 4.
- LRU 1 and LRU 2 are equipment items with metallic chassis that are normally bonded to the host vehicle frame. Hence in the EMI test setup, they are bonded to the copper ground plane bench.
- LRU 3 has a non-conductive plastic chassis. In the vehicle installation, it is attached to a mount that places it several cm away from the vehicle structure. Thus in the MIL-STD-461F EMI test setup, LRU 3 is placed on top of 5 cm Styrofoam.

  LRU 3 has a safety ground conductor that is 1.5 meters +/- 10 cm per installation drawings. This grounding conductor (cable bundle 4) is routed 5 cm above the ground plane and bonded to the ground plane at the end of the 1.5 meter run.
- Per MIL-STD-461F test conditions, cable bundles are placed 5 cm above the ground plane bench. The coordinates shown in Figure 4-1 represent the approximate center of the cable cross-section.
- With the exception of the gross overshield that covers cable bundles 1, 2 and 3, all conductors in cable bundle 1 branch at location (400, 10, 5.5) continue to either cable bundle 2 or cable bundle 3 through a metallic Y tube. The overshields on cable bundles 1, 2 and 3 become continuous with this tube.

Figure 4.2-1 shows a schematic of the cable harness, as well as photographs of its most significant components.

4.3 Determination of Significant Features

The real skill of electromagnetic effects modeling and simulation rests with identifying which features of the real hardware need to be included in the model and simulation. Selecting features that are not significant makes the model complex to build and simulation very time consuming, not to mention the increased likelihood of introducing computational instabilities. Omitting features that may be significant may lead to gross errors and inaccurate conclusions.

To determine which features may be significant, the analyst must first identify the highest frequency of interest. For susceptibility of defense/aerospace electronic equipment and subsystems that utilize military style (e.g. MIL-C-38999) connectors and shielding, notable reception of MIL-STD-461F environments via cable assemblies is typically limited to frequencies below 400 MHz, unless there are gross underlying design flaws that would typically be identified during a design review by a qualified, experienced EMC engineer.

Also, as noted in Section 2, the MIL-STD-461F conducted susceptibility requirements present threats with the highest frequency components of 200 MHz (CS114), 320 MHz (CS115 w/ 1 nS transition time), and 100 MHz (CS116). The RS105 threat carries significant content that quickly falls off above 80 MHz.

Once the highest frequency of interest has been determined (typically 400 MHz), a wavelength, λ, can be associated with it. For example, at 400 MHz, the wavelength is 75 cm in air, and 37.5 cm in a dielectric with a permittivity of 4.0.

C2M2L

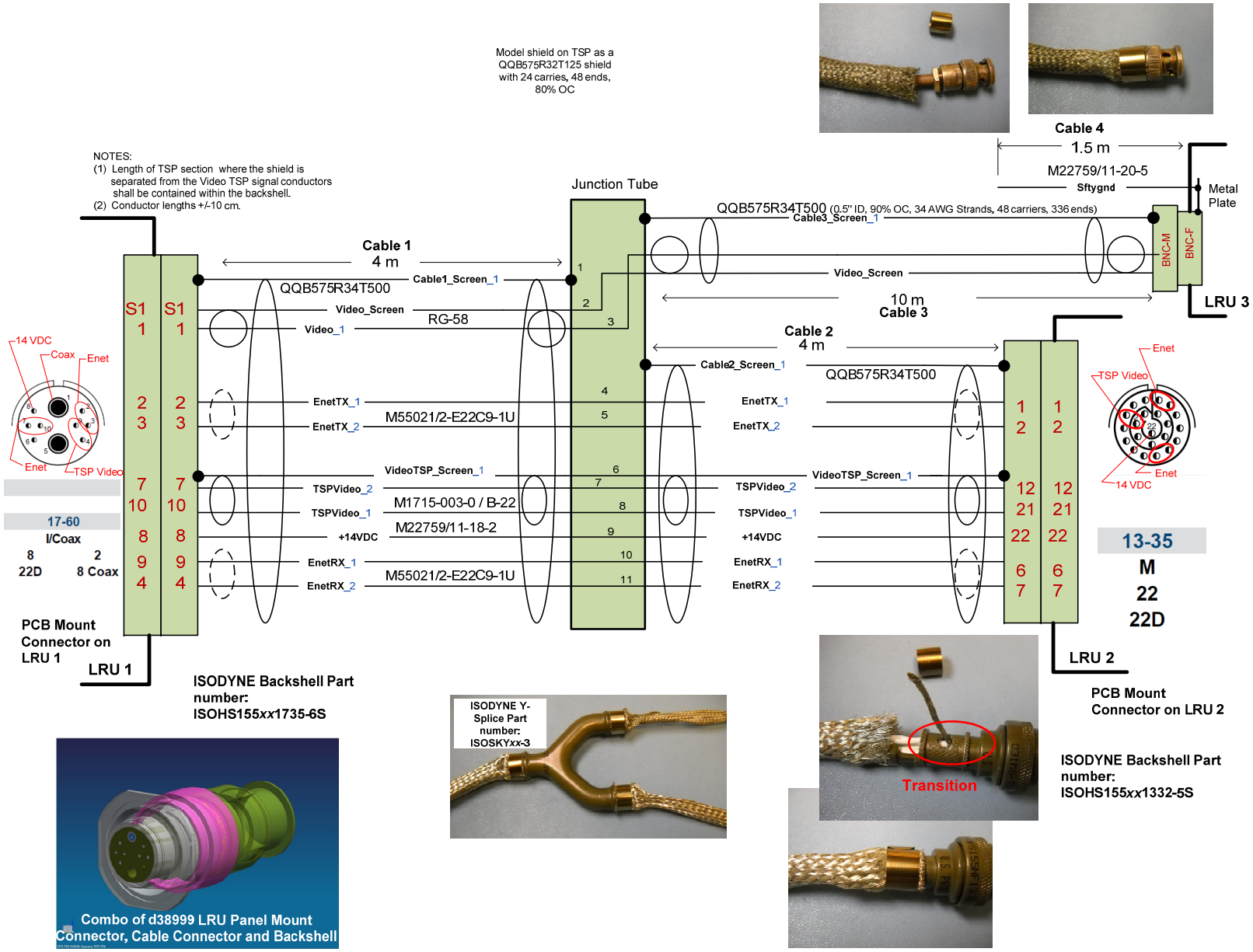

Figure 4.2-1. Cable Harness Build Information

Mechanical features that have dimensions greater than λ/20 are almost always electromagnetically significant. When a large amount (> 60 dB) of shielding is desired, features as small as λ/100 could be important. For example, a 3.75 cm wire (λ/20 at 400 MHz in air) used to terminate a cable shield will most likely degrade the effectiveness of that shield to somewhere in the 10 to 16 dB range at 400 MHz, whereas a continuous circumferential shield termination will typically yield more than 60 dB of shielding if the shield itself can provide that much shielding.

From a practical standpoint, the "electrically significant" threshold falls somewhere between λ/20 in air and λ/20 in a dielectric with a relative permittivity of 4.0 (FR-4 in circuit boards, cable dielectrics). This range is thus 1.875 cm (0.74″) and 3.75 cm (1.5″) at 400 MHz. Some common conclusions that come out this are as follows:

- Model the backshell-connector-connector assembly if the total length is greater than 0.75″. Otherwise ignored in most situations.
- Model the wiring that breaks from a constant cable cross-section if the length is longer than 0.75″.
- Model shield termination pigtails longer than 0.75″.
- If two connectors are within 1.5″ of each other, it is typically acceptable to model both as having a common location (same node).

A few other generalizations that have been derived from experience for frequencies no greater than 400 MHz include:

- Properly terminated coaxial connectors can be ignored. Rather, model as an extension of the coax cable itself.
- Circumferentially terminated cable shields can be modeled as perfect connections.
- Coupling between cable runs separated by 2 cm or more can be ignored.
- A 20 cm change in length or node position of a typical 2 to 10 meter cable in a MIL-STD-461F test setup or its model will typically not change the overall pass/fail conclusion by no more than a dB or so, unless there are gross violations of best industry-standard EMI design practices.
- Features that cause DC bonding resistance to be greater than 2.5 milliohms should be included in the electromagnetic model.
- Electrically short paths (e.g. length less than 1.5″) for terminating circuit elements and assemblies to a ground can generally be modeled as an ideal connection, if the DC bonding resistance is less than 2.5 milliohms and the path has a width of at least 1/3 the length.

4.3 Entity Blocks

Build details of the cable harness for EMI test is presented in Figure 4.2-1. It indicates the part numbers of the connectors, backshells, shields and signal conductors. Signal names and connector pins associations are also indicted on the drawing.

Figure 4.3-1 presents the schematic for the I/O associated with Cables 1 through 4. The schematic is limited to I/O components that are deemed instrumental in influencing the interference voltages and currents at critical circuit locations. Not only does this schematic contain discrete components, it contains SPICE model and Touchstone format S-parameters blocks as well. The schematic also indicates points for probing voltage and current (red diamonds). With respect to grounding and bonding, the schematic indicates connection to 3-D ground per Figure 4-1 and establishes the location where the 3-D cable harness environment ground would connect to co-simulation environment ground reference for the case where interference is to be applied at LRU 1.

Based on the highest frequency of interest being 400 MHz and the details presented in Figures 4-1 (the EMI compliance test setup), 4.2-1 (cable build drawing), and 4.3-1 (I/O representative schematic), we would conclude that the following entity blocks would have to be included in our simulation model:

- Cable harness made up of constant cross-section cable bundles 1, 2, 3, and 4.
    - The Y-tube / junction for cable bundles 1, 2, and 3 can be modeled as an ideal connection at the center of the Y-tube.
    - The cable harness with include grounded nodes at (0, 10), (800, 10), and (660, 140) cm.
    - Since the schematic does not show direct or closely coupled connection between the power input conductors and the cable bundle 1 signals, and the prime power input does not share a connector with the signal I/O of interest, the power cable will not be included.
- Connectors-backshell combination at LRU 1
- Transition at LRU 1 backshell
- Connectors-backshell combination at LRU 2
- Transition at LRU 2 backshell (because of the small size of the LRU 2 backshell, the bond between the video twisted shielded pair's shield and the backshell can be modeled as an ideal bond)
- (The connectors and transition at LRU 3 can be ignored due to high-quality shield terminations.)
- One environment stimulus (Figure 4-1 shows setup for CS114, CS115 and CS116 on cable bundle 1.)
- LRU 1 I/O circuits
- LRU 2 I/O circuits
- LRU 3 I/O circuits

Figure 4.3-2 shows the example problem split into entity blocks. The interfaces are shown for each block. Node labels and coordinates denoting the physical location of the Cable Harness entity block's interfaces are also shown. Also shown is the combination of the LRU 1 Connector Set and Transition entities combined into one block, as this appears to be an easy and convenient method to simply the model build process. The same is done for the LRU 2 Connector Set and Transition entities. In summary, with the exception the RS Stimulus entity block (which would be embedded in the Cable Harness model space

entity), the blocks and interconnections shown in Figure 4.3-2 should also be present in the co-simulation tool's presentation of the model. Table 4.3-1 describes and summarizes the applicable entity blocks.

C2M2L

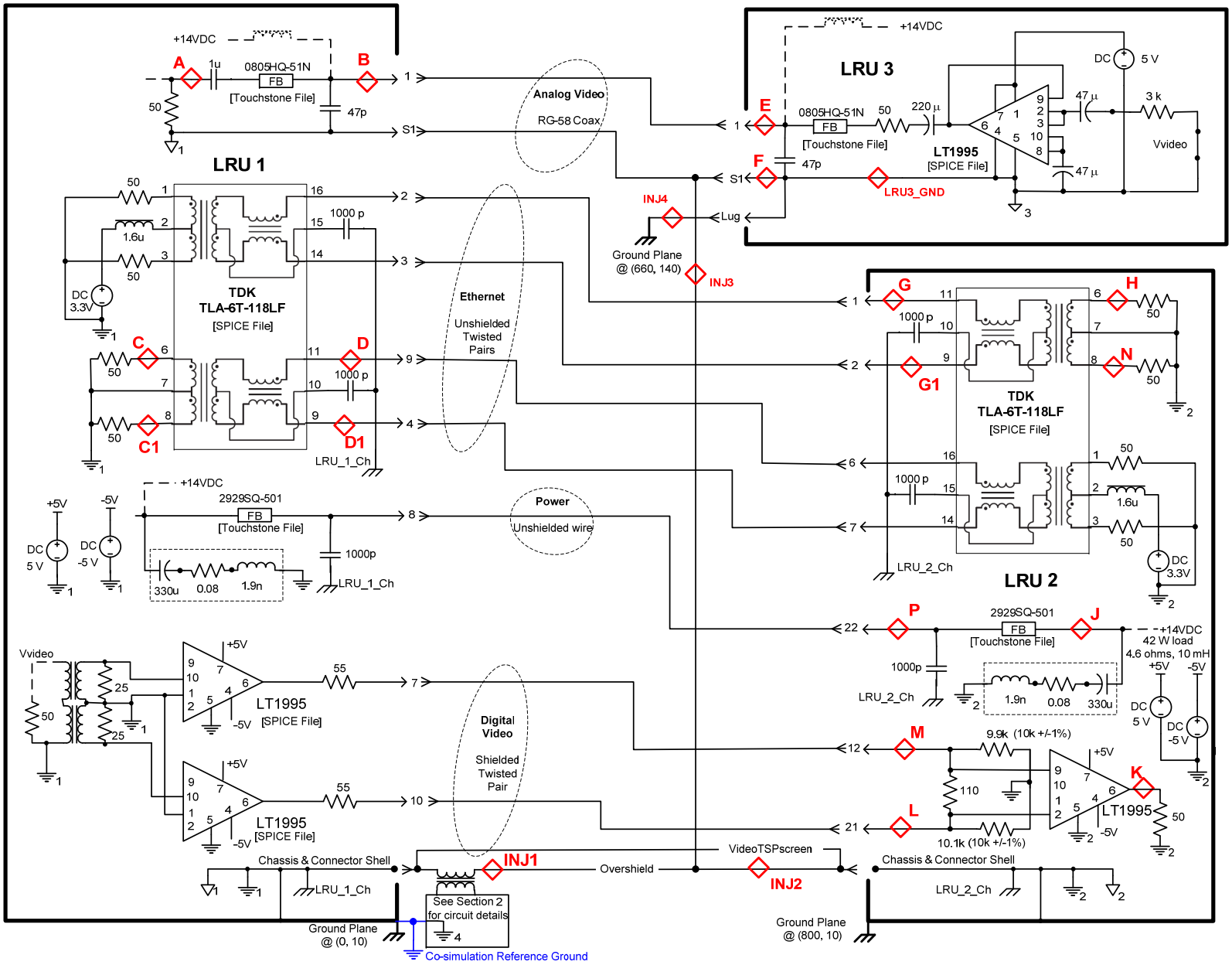

Figure 4.3-1. I/O Circuits Schematic with Probe Locations

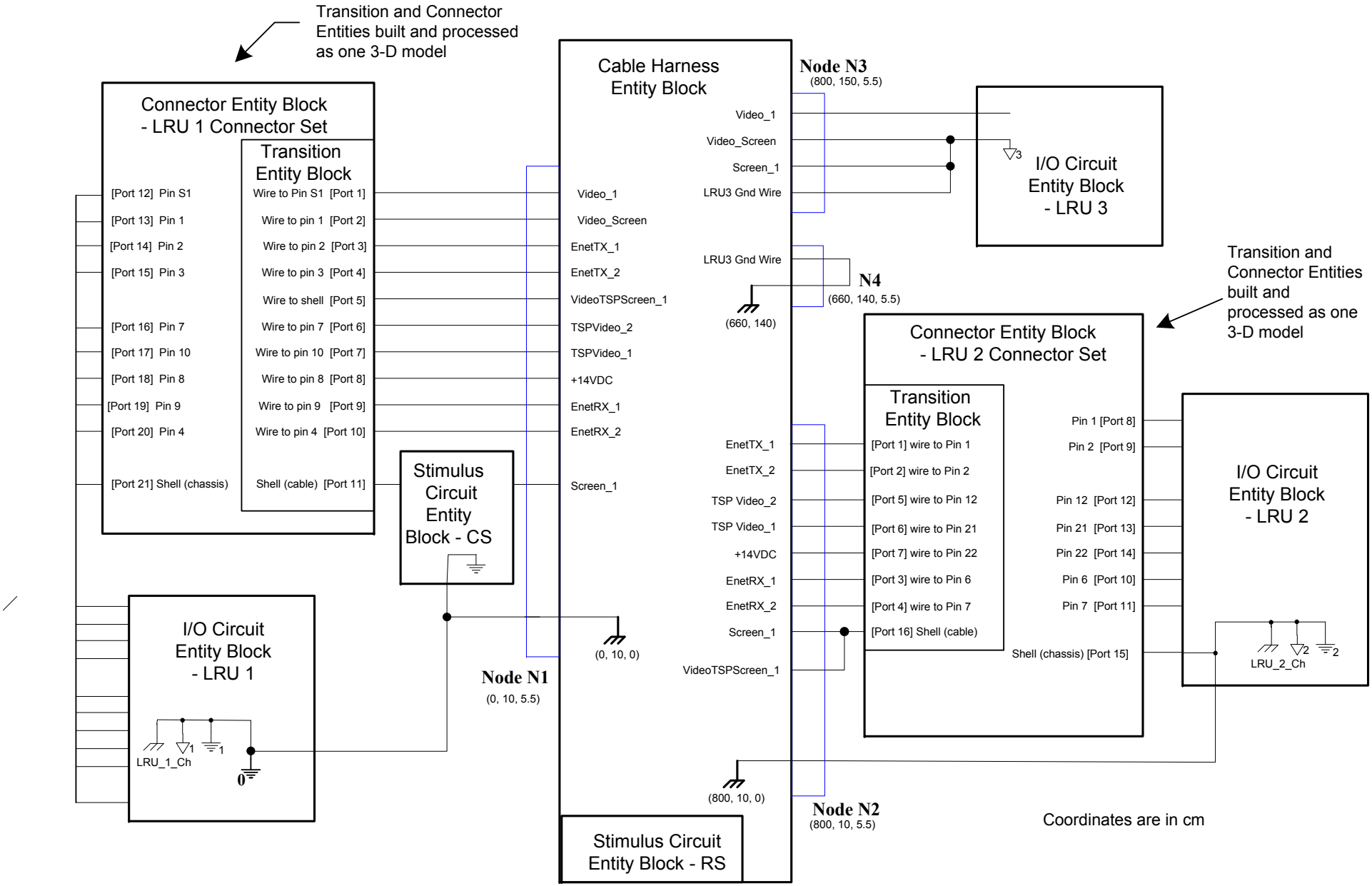

Figure 4.3-2. Entity Blocks and Interconnection in Co-simulation Framework

Table 4.3-1. Entity Block Description and Specification for Example Model

Entity Block Type & Name	Description	Method of Specification	Notes
Cable Harness – Cable Harness	Multi-branch cable as geometrically shown in Figure 4-1, with conductors as noted in Figure 4.2-1. Cable is routed 5 cm above a copper ground plane (centered at 5.5 cm above the ground plane). Y-connector assumed to be ideal.	3-D model (2.5-D TLM format) block built in Cable Studio. Resulting model is represented electrically as an S-parameter block.	This entity contains terminals (which can be connected to other blocks) for electrical connection to the ground plane at three specific locations within the 3-dimensional space occupied by the cable harness and its ground plane.
Connector & Transition Combined – LRU 1 Connector Set	Includes the connector and backshell that is attached to the cable, the connector attached to LRU 1 or LRU 2 and the wiring that transitions from the constant cross-section cable bundle to connector pins.	3-D model built in Microwave Studio. Connector parts model data imported from mechanical models. Wires added in Microwave Studio. Resulting model is represented electrically as an S-parameter block.	LRU 1 Connector Set w/transition is a 21-port S-parameter block. LRU 2 Connector Set w/transition is 16-port S-parameter block.
Connector & Transition Combined – LRU 2 Connector Set			
I/O Circuit – LRU 1	Driver and receiver circuits with EMI filters that represent what the connector pins will electrically see. Includes probe points on circuit nets and nodes of interest for determining interference levels. Circuit elements representing impedance in connections between grounds also included. Output voltages from probes will be with respect to co-simulation framework node 0 ground.	Collection of discrete circuit elements, SPICE models, and S-parameter file/data blocks.	The cable harness's reference ground plane at location (0, 0) and the co-simulator tool node 0 are connected in this block to represent a connection of circuit ground (D1) to the ground plane at the physical location of LRU 1 (node N1).
I/O Circuit – LRU 2			Circuit grounds, through various impedances, connect to the cable harness's reference ground plane at a specific location (node N6).
I/O Circuit – LRU 3			Circuit ground in the LRU 3 block is "floating" from the reference ground plane. It does connect to the cable harness's reference ground plane at node N9 through about 1.5 meters of AGG 22 wire.
Connector & Transition Combined – LRU 3 Connector Set	Determined to be electrically insignificant and is thus omitted.		Connection of cable overshield, coax ground and connector shell ground wire is done as an ideal connection at the interface of cable block node N8 and the LRU 3 Circuit block.

Entity Block Type & Name	Description	Method of Specification	Notes
Stimulus – CS (for LRU 1 cable 1 evaluation)	Electrical model of CS114, CS115 or CS116 sources as well as monitoring probes needed to "calibrate" the source levels.	Discrete electrical components with a voltage or current source. See details in Section 2 for models of CS114, CS115 and CS116 sources.	Circuit is referenced to the cable harness ground plane at the point of application (node N1). The use of this block will require an AC Simulation task in the co-simulation framework if the CS114 environment is applicable. The use of this block will require a Transient Simulation task in the co-simulation framework if the CS115 or CS116 environment is applicable. Should not be used at the same time as Stimulus – RS block.
Stimulus – RS (for LRU 1 & LRU 2 evaluation)	Planewave at 50 V/m, 30 to 500 MHz, with the following orientations [E, H, k]: (a) [z, x, y] (b) [x, -z, y] Also, planewave with the E-field waveform per Figure 2.5-1 with the following orientations [E, H, k]: (a) [z, -y, x] (b) [z, x, y]	Planewave excitation expressed as a time domain Gaussian waveform (for the 50 V/m planewave), or a double exponential pulse. This block is inserted into the Cable Harness block.	Only objects in the Cable Harness block are exposed to this stimulus. The use of this block will require a Transient Simulation task in the co-simulation framework. Should not be used as the same time as the Stimulus – CS block.

4.4 Model Input and Analysis – Explanation by Example

THE FIGURES REFERENCED IN THIS SECTION ARE PRESENTED AFTER SECTION 5.

Experience has shown that co-simulation models should be built and tested in phases or steps, with a check of the data for reasonableness[7] at the end of each step. This will allow capture of potential instabilities and errors that may go unnoticed until after the final complete run in the co-simulation framework. For the CST Studio Suite tool set with the co-simulation hosted in Design Studio, the following sequence model build and checks is recommended. The application of the CS114 environment to the example cable harness is presented to illustrate the modeling process. The results from each of the modeling steps are presented in figures at the of this section.

4.4.1 I/O and Signaling Schematic with Common Ground

The first step of EMC modeling and analysis for a complex cable harness is to identify the significant portions of the I/O interface circuits, along with the EMI filter components. Thus the I/O circuit entity blocks are built and checked as follows, first with a common grounding scheme, in the co-simulation framework's schematic editor.

a. Connect inputs and output per cable bundle signal wiring (Figure 4.4.1-1).
b. Do not include cable shields that are not used as signal returns.
c. Do not include probes.
d. Terminate the circuit inputs and outputs with 50-ohm S-parameter ports.
e. Run a S-parameter simulation task over the desired target co-simulation frequency range (e.g. 1 kHz to 400 MHz). It may be beneficial to extend the lowest frequency down to 1 Hz to allow a more complete observation of circuit behavior.
f. Evaluate S-parameter results for reasonableness. Specifically, ensure that the magnitude of reflection coefficients are no greater than 1 and that the gains (losses) with respect to frequency are as expected.

   Note that the S-parameter simulation will provide 50 ohm terminations. This may, or may not, be representative of the actual circuit.

   Of particular importance, ensure that the gains for each circuit are flat for the needed frequency range. For example, per Figure 4.4.1-2, we do see that the gain of the analog video circuit is flat from 2 kHz to 10 MHz to provide an adequate NTSC baseband video link, the gain of the 100BaseT Ethernet circuits is flat over the required 1 to 100 MHz range, and the gain of the digital video circuit is flat from below a few Hz to 10 MHz to support digital NTSC video with I-frame compression – 40 Mbps total rate (30 Mbps serial data rate plus 10 Mbps overhead) sent as 8-ary ASK. Additionally, we see the gain through the 14 VDC power circuit falling off above 10 Hz, which is expected of a good power EMI filter. The reverse direction gains shown in Figure 4.4.1-3 verify operability of the SPICE models, noting the high reverse isolation provided by the operational amplifiers used in the video circuits.

[7] Throughout this section, it is required that the data be evaluated or checked for "reasonableness." From a practical stand-point this activity typically requires an EMC engineer with many years of practical test, measurement, troubleshooting, and analysis experience.

4.4.2 I/O and Signaling Schematic with Target Grounding System

From a practical standpoint, a common ground is typically not applicable for most systems and equipment. Grounds be intentionally be isolated or they may be have some isolation due to impedance and electromagnetic transmission line characteristics between them if distances are electrically long. This must be accounted for if accurate results are expected. To accommodate ground isolation with the three LRUs that make up the system under test, the following process is followed.

a. Modify SPICE model files which contain a "node 0" and are used in a situations where the model's reference ground (node 0) will be connected to the co-simulation framework's reference ground through an impedance and/or electrically long path. This is done by editing the SPICE netlist files as follows.
   i. Add ***GND*** to the list of .SUBCKT terminals
   ii. Add net ***RGND GND 0 1e8***
   iii. Replace all node zeros with node ***GND***

   Save the file with ***_float*** added to the file name

   For this example, the operational amplifiers used in LRU 2 and LRU 3 require this modification if we let LRU 1's ground be equal to the co-simulation framework ground as planned in Figures 4.3-1 and 4.3-2. Note that the modified SPICE blocks will now contain an extra terminal called GND.

b. Modify S-parameter files that are used in a situations where the model's reference ground (node 0) will be connected to the co-simulation environment through an impedance and/or electrically long path.
   iv. In CST Design Studio, the "Differential" selection can be made for imported Touchstone S-parameter files to accomplish this.

   For this example, the Touchstone models for the ferrite inductors in LRU 2 and LRU 3 require this modification. The result will be twice as many ports on the affected model blocks.

c. Build the I/O circuit models with the target grounding scheme. Add connections between the floating grounds and the co-simulation environment's reference ground using an impedance that may be representative of what is expected to occur via the cable model and other 3-D structures in the paths. (Figure 4.4.2-1).

d. Connect input and output circuits per cable bundle signal wiring.

e. Do not include probes.

f. Terminate the circuit inputs and outputs with S-parameter ports. Use differential S-parameter ports for those ports with a reference other than the co-simulation environment's ground reference. For this example, this will be needed at LRU 2 and LRU 3.

g. Run a S-parameter simulation task over the desired target co-simulation frequency range (e.g. 1 kHz to 400 MHz) as done in step 4.4.1.e. It may be beneficial to extend the lowest frequency down to 1 Hz to allow a more complete observation of circuit behavior.

h. Evaluate S-parameter results for reasonableness. Specifically, ensure that the magnitude of the reflection coefficients are no greater than 1 and that the gains (losses) with respect to frequency are as expected.

Unless there are notable ground impedance issues in the signal paths, the results (Figures 4.4.2-2 and 4.4.2-3) should look almost identical to those in step 1, with possible exception of values that are below -100 dB do to "simulation precision." If the results do look unsatisfactory, a system EMC design flaw may be present – a flaw that should be corrected before performance in an interference environment is considered.

4.4.3 Cable Harness Model Build

The cable harness model should be built per the instructions below. Prior to build of the cable, the geometrically and physical details of the cable cross-section's conductors, shields and insulators must be known. This may require some research, especially with respect to the details of shields, which determine transfer impedance.

a. Using the cable modeling tool (e.g. CST Cable Studio), build the cable model to include the ground plane.[8] (Figures 4.4.3-1 and 4.4.3-2)
b. Simulate the cable model with the cable LRU interface ports terminated in to S-parameter blocks. Use differential ports on pairs that would normally utilize differential signaling. Include S-parameter ports on cable shields terminals as well. (Figure 4.4.3-3)
c. Evaluate S-parameter results for reasonableness. Specifically, ensure that the magnitude of reflection coefficients are no greater than 1 and that the gains (losses) with respect to frequency are as expected. A typical vehicle cable will exhibit no loss at very low frequencies (<10 kHz) and losses increasing to about a 1 to 2 dB nominally at 400 MHz per 2 meters of conductor. The losses will most likely exhibit peaks and valleys starting at the frequency where the signal transmission path is one-quarter wavelength if impedance mismatch is present. For example, a 8 meter transmission path with unmatched terminations will exhibit its first resonant peak or valley at 9.3 MHz if the dielectric is air, a little lower if there is insulation on signal conductors (7.2 MHz if effective permittivity = 1.6). Additionally, other resonant peaks and valleys can be expected where parasitic capacitance and inductance caused by the presence of other conductors and cable features interact with the conductor of interest.

   The desired path transfers (Figure 4.4.3-4), cross-talk between conductors in the cable bundle (Figure 4.4.3-5), and coupling between the overshield and shielded conductors (Figure 4.4.3-6) were plotted and evaluated. The later is instrumental in providing the analyst a view of the expected amount of shielding that can be provided by the cable/connector assembly. As seen in Figure 4.4.3-6, very little shielding (at several frequencies) is provided to the unshielded power conductor in the bundle above a few MHz, whereas more than 80 dB of shielding is achieved with the shielded twisted pair used for digital video. It is also noted that the shielding provided by the coax cable is less than one may expect; often

[8] For conducted susceptibility modeling with CST Studio, simulation time can be reduced by setting up the cable model using the "none" option for coupling to 3D field solver. Use "uni-directional" coupling for the radiated environments. Other Cable Studio setting should be as follows: Allow modal models, Ohmic losses, Dielectric loss, High accuracy, Hexahedral TLM mesh, -80 dB Solver accuracy, Use Broadband phase shift, Double precision solver, 400 MHz frequency range with 1001 samples, linear sweep.

this results from the system grounding and signal termination scheme, especially as it is noted that the unshielded twisted pair performs better. It is important to observe, when considering the results that the Ethernet and digital video twisted pairs terminate into balanced loads, the analog video coax circuit termination is unbalanced. Finally, note the 50-ohm terminations on the shield terminals will also degrade shielding results.

4.4.4 Combine Cable and Interface Circuit Entity models

The cable can be inserted in to the circuit model developed in Section 4.4.2 to replace the ideal electrical connections between the LRU grouped circuits. The following workflow is recommended.

a. Using the I/O circuit entity blocks developed in Section 4.4.2, which contains modified SPICE and differential S-parameter blocks to support the floating ground, import the cable model entity block into the co-simulation framework. (Figure 4.4.4-1)
b. Use the same S-parameter ports at the I/O circuits as used in Section 4.4.2 to determine the signal transfer via the desired signal paths (Figure 4.4.4-2). The results should typically look similar to what were seen in step 2, except for the typical additional loss expected at frequencies starting between 500 kHz and 3 MHz, depending on the type of cable, length of cable, and impedance match between the I/O circuit and the cables. Peaks and valleys may be present due to cable resonance and resonances caused by parasitic capacitances and inductances.
c. Evaluate cross-talk between key signals for reasonableness (Figure 4.4.4-3). Note that cross-talk is a function of terminating impedances, and, with that, expect differences in end-to-end cross-talk when the intended terminating circuits are included in the model.
d. Use the results of this step as a decision point for cable design adequacy with respect to signal integrity. If loss and/or cross-talk is excessive, the next action may be to redesign the cable with a focus on signal integrity – poor signal integrity may prevent system level success in a benign environment!

4.4.5 Addition of EMI Environment Injection

The EMI environment injection model is next added in the co-simulation environment. Then the S-parameter analysis is performed to ensure reasonable transfer from the environment to the I/O circuits via the cable. Cable design problems may be identified as early as this step. The process to add the CS114 environment is as follows:

a. Add CS114 injection model to cable under test at the LRU under test in the co-simulation framework (e.g. CST Design Studio). Drive the source with an S-parameter port. Terminate signal ends with S-parameter ports. (Figure 4.4.5-1)
b. Recheck coupling through desired signal paths (Figure 4.4.5-2).
c. Evaluate the coupling between interference drive source and victim circuits for reasonableness. (Figure 4.4.5-3)

   Compare the results obtained in Section 4.4.3 (Figure 4.4.3-6) for the coupling

between the cable conductors upon which interference will be applied to with what was obtained in this step. This comparison shows the effects of the filter circuits. With the exception of an offset for insertion loss of the interference entity block, the results at the very low end of the spectrum (< 10 kHz) should look about the same.[9] As frequency increases, additional attenuation would ideally be expected in this model due to filtering provided by the I/O circuits, at least up through the frequency range where the filter parts are effective. However, interference coupling may increase in balanced circuits due to mode conversion via the interface parts. Again, the importance of this step is to evaluate the performance of the interface filters and circuits with respect to interference rejection: the circuits, not the cable, may turn out to be the limiting factor with respect to interference rejection.

4.4.6 Build Models for 3-D Connector, Backshell, and Transition Entity Structures

As with the cable harness model, the model for each connector, backshell, transition, or combo entity are build as separate stand-alone blocks that can be imported into the co-simulation framework. The process below is performed separately for each connector, transition, and connector/transition combo entity block. This particular example has two connector/transition combos (LRU 1 and LRU 2) that are electrically significant and hence require modeling.

a. Obtain MCAD data for connectors, backshells, connector pins, and associated assembly parts.
b. Using a MCAD tool, such as Siemens NX CAD, that can support manipulation of the assembly parts and produce CAD file in PTC/Pro/Engineer **.prt** format, produce a model that includes the geometry of shell components, dielectric fill, grounding structures, and pin structures. This step is typically done by a mechanical designer, not an EMC engineer.
c. Convert (translate) **.prt** format drawing to a Standard ACIS[10] Text (.sat) format file using a CAD conversion tool such as TransMagic, a product of TransMagic, Inc.
d. Import .sat format 3-D model into CST Microwave studio. Add transition entity block features to connector model if applicable, using the MCAD features of this tool. Assign material properties. Add a 3-D ground plane structure around the connector for use as a reference for ports. Add ports connecting to the connector pins at the LRU end and to pins and/or transition wires at the cable end to the 3-D ground plane. Note that the length of the port will be presented as a wire. Also, add ports between the backshell and the reference ground plane at each end if the backshell is metallic. (Figure 4.4.6-1 shows the LRU 1 connectors and transition, Figure 4.4.6-4 shows the LRU 2 connectors and transition)
e. Using the 3-D electromagnetic simulator tool (e.g. Microwave Studio), mesh the 3-D model and perform a full-field 3-D simulation to produce a S-parameter block or an 3-D electromagnetic block that can be imported in to the co-simulation framework, representing each applicable connector, transition and/or

[9] If results are lower than -100 dB, do not expect consistency between minor changes to the circuit, as anything below -100 dB may be approaching the limit of the simulator's dynamic range.
[10] ACIS is an acronym for the Alan, Charles, Ian's System 3-D modeling engine which is now owned by Spatial Corp.

connector/transition entity block. (The full 3-D simulation for a connector with several pins, such as the LRU 1 connector assembly and transition, which is represented as a 21-port structure, may take a couple days to run.)

f. Link or import the S-parameter block into the co-simulation framework (e.g. Design Studio). Add S-parameter ports to represent signal flow through each structure per the overall cable/connector assembly model build (Figure 4.4.6-1 for LRU 1 and Figure 4.4.6-5 for LRU 2). Run a S-parameter simulation task.

g. Evaluate S-parameter data to ensure that the transfers through the desired paths are what is expected (Figure 4.4.6-3 for LRU 1 and Figure 4.4.6-6 for LRU 2).

   Note that the transmission of a "signal" from one port to another will show the "signal" received another port to be an integer fraction of the transmitted "signal" if connectors occur in the connector and/or transition. This is the case for the shield of the twisted shield pair in the LRU 1 connector assembly – it is connected to the backshell. Thus a signal applied at the LRU end of the connector assembly will be divided between the connection to the shield of the twisted shielded pair and the cable end of the backshell.

h. Export the connector/backshell and transition structures as Touchstone files for use in the co-simulation framework. Alternatively, the structure can be exported as a 3-D electromagnetic model block that can be imported into the co-simulation framework.

4.4.7 Complete Co-Simulation Integration and Checkout

Electromagnetically significant connector assembly block models are next inserted between the ends of the cable and the interface circuits in the co-simulation framework. The environment interface is also include. At this point, as noted in the process below, S-parameter simulations can be used to ensure correct connectivity.

a. Import the connector/backshell and transition structure Touchstone files into the co-simulation framework for inclusion with the I/O circuit entities, the cable harness entity and an interference source injecting onto the cable overshield (Figures 4.4.7-1 and -2). Alternatively, the connector blocks can be imported into the cable modeling tool as a 3-D electromagnetic model block.

b. Use the same S-parameter ports at the I/O circuits as used in Section 4.4.5 to determine the signal transfer via the desired signal paths (Figure 4.4.7.-3). The results should typically look similar to what where seen in Section 4.4.5, except for the typical additional loss at frequencies starting above 3 MHz, depending on the type of cable, length of cable and impedance match between the I/O circuit and the cable. Peaks and valleys may be present due to cable resonance and resonances caused by parasitic capacitances and inductances. Losses in signals that are transported via shielded cables may become even more notable at the higher frequencies if the shields do not ideally to connector pins and/or the connector pins do not present an ideal impedance match.

c. Evaluate cross-talk between key signals for reasonableness. Cross-talk for signals that are transported via shielded cables may become even more notable at the higher frequencies if the shields do not ideally to connector pins and/or the connector pins do not present an ideal impedance match.

d. Evaluate the transfer between the environment and the circuit interfaces for reasonableness (Figure 4.4.7-4).
e. Use the results of this step as a decision point for cable design adequacy with respect to signal integrity. If loss and/or cross-talk is excessive, the next action may be to redesign the cable with a focus on signal integrity – poor signal integrity may prevent system level success in a benign environment.

4.4.8 Apply Environment, Probe Victim Circuits and Analyze Results

MIL-STD-461F CS115 Curve 5 limit is used for application of interference at the LRU 1 signal I/O cable for this example. The following process is used.

a. Set up the co-simulation framework for an AC simulation task over the 10 kHz to 400 MHz frequency range with a logarithmic frequency sweep.
b. Remove all S-parameter ports, except for the port driving the CS114 injection source. Replace the S-parameter ports with representative circuit termination impedances (Figures 4.4.8-1 and -2).
c. Add the CS114 calibration setup to the model in the co-simulation framework. Drive it and the injection port as a voltage source. The calibration setup and method is detailed in Section 2.
d. In the AC simulation task setup menu, set the two aforementioned injection ports to voltage sources with an amplitude of 30 volts. They are shown as ports 11 and 12 in Figures 4.4.8-1 and -2.
e. Add the probes on the nets of interest as shown in Figure 4.3-1 . Note: The probes will measure the current flowing in a circuit net and the net-to-node_0 voltage, where node_0 is the reference ground in the co-simulation framework.
f. Run the CS114 simulation.
g. Review the raw probe voltage and current plots (Figures 4.4.8-3 and -4) for reasonableness, in particular the currents on the cable bundle shields. Note that the simulation tool may require probe voltages and currents to be plotted using a "Results" window prior to export to a text file – the export is done from the "Results" plot.
h. Determine how the amplitude of the exported and plotted data from the simulation tool is presented. Typically, most simulation tools will present the "magnitude" of magnitude-phase representation of the signal, or as more commonly referred to, the "zero-to-peak" value. On the other hand, the voltage, current and field strength limits in MIL-STD-461F for swept frequency environments are stated as RMS levels. Thus when comparing simulator results to the MIL-STD-461F limit, the simulator results must be converted to RMS quantities, which is done by dividing the magnitude values by sqrt(2), if presented as zero-to-peak.
i. Using the post-processing function of the co-simulation framework, or Microsoft Excel, to compute the injection drive level adjustment factor (DRIVE_SF) as a function of frequency based on the applicable CS114 current limit curve for the calibration setup. If this drive correction factor is more than 10x in either direction, consider re-running the simulation (to improve dynamic range) with a different drive level for the calibration and injection circuits, noting that the drive level for each circuit should be the same. The drive scale factor is determined as follows:

$$DRIVE_SF = I_{limit} \times sqrt(2) / I_{CAL}$$

where:

I_{limit} = Applicable MIL-STD-461F CS114 limit, Amperes
I_{CAL} = Result (0-to-Pk) from simulation of calibration circuit, Amperes.

The Drive Scale Factor is plotted in Figure 4.4.8-5.

j. Using the post-processing function of the co-simulation framework, or Microsoft Excel, to compute the results scaling factor based on the drive level scaling factor, which provides for the maximum possible drive to the cable under test adjustment per MIL-STD-461F calibration, and the cap on the amount of interference current on the cable per MIL-STD-461F procedures. The equations for this computation are as follows.

$$I_{INJraw} = I_{INJ1} \times DRIVE_SF$$

$$I_{INJactual} = \begin{cases} I_{INJraw} & \text{if } I_{INJraw} \leq 2 \times I_{limit} \\ 2 \times I_{limit} & \text{Otherwise} \end{cases}$$

$$SF = I_{INJactual} / I_{INJ1}$$

$$= \begin{cases} I_{INJraw} / I_{INJ1} & \text{if } I_{INJraw} \leq 2 \times I_{limit} \\ 2 \times I_{limit} / I_{INJ1} & \text{Otherwise} \end{cases}$$

$$= \begin{cases} I_{limit} \times sqrt(2) / I_{CAL} & \text{if } I_{INJ1} \times sqrt(2) / I_{CAL} \leq 2 \\ 2 \times I_{limit} / I_{INJ1} & \text{Otherwise} \end{cases}$$

where I_{INJ1} = Result from simulation for total injected current, Amperes; noting that the calibration circuit and the injection circuit each have the same source driving voltage and impedance.

This scaling factor will be smaller than the drive scaling factor (DRIVE_SF) if the cable harness presents a low impedance to the injection source. This lower factor is representative of reducing the interference source power during an actual laboratory test, as the current limit becomes applicable (6 dB above the CS114 limit per MIL-STD-461F). At frequencies where the presented impedance to the interference source is relative high (50 ohms or greater), the overall scaling factor (SF) will be equal to the drive scaling factor (DRIVE_SF). This represents the interference source power being set to the full calibrated level during a laboratory test. The overall scaling factor is also plotted on Figure 4.4.8-5.

For this example, which has a well shielded cable harness, we see from the scaling factors that over most of the test frequency range the "drive level" will need to be reduced as the cable current limit will be reached before the forward power limit. Where the cable starts to become one-quarter wavelength long, we see resonance effects – the result is the presentation of a relatively high impedance at the injection point.

k. Adjust the simulation probe currents and voltages by the scaling factor determined in **j** above. This may be best done by exporting the data to a spreadsheet for this post processing. Figures 4.4.8-6 through 4.4.8-8 present the

corrected results.

It is very important that the modeling and analysis process focus closely on numerical precision, as the dynamic range associated with EMC situations is typically very large. For example, in Figures 4.4.8-7 we see over 160 dB (a ratio of 1 to 10^8) differences in current and voltage amplitudes.

4.4.9. Analysis of the Results

Prior to analyzing the results, the threshold voltages and currents at the key interface circuit nodes and nets must be known. This often involves consulting the interface standards and component data with quality objective. For example, IEEE 802.3 is consulted to determine the allowable noise (interference) at the Ethernet receiver input for the 100Mbps rate. The analysis process for the subject system proceeds as follows:

a. Identify key signal-to-interference points (probe points) of concern and quantity allowable interference levels. Plot and compare the interference levels (noise) predicted by the simulation with the allowable interference levels. For this example, there are four nodes:

1) **TSP Digital Video presented to receiver in LRU 2 at probe K**

The format for the video presented to LRU 2 is NTSC DV[11] with I-frame compression – 40 Mbps total rate (30 Mbps serial data rate plus 10 Mbps overhead) with a 10 MHz channel bandwidth using 8-ary Amplitude Shift Keying (ASK).[12] A 42 dB S/N (36 dB plus 6 dB margin) is needed to prevent pixilation caused by stationary noise.[13] The desired signal voltage (S) at node K will be 4 volts peak-to-peak per the link design standard. Maximum interference allowed is thus 11 mV_{rms} for frequencies up to 10 MHz. Above 10 MHz an increase of noise is allowed at 40 dB/decade, up to VCC (= 5 Volts).

Figure 4.4.9-1 presents a plot of predicted interference at the output of the digital video receiver at LRU 2 (probe K in Figure 4.3-1). The allowable noise is also plotted. Of course plot in Figure 4.4.7-3 shows that the channel bandwidth is acceptable. Thus in this example, we can expect acceptable performance from the Digital Video link in the MIL-STD-461F CS114 Curve 5 environment.

2) **Analog Video (Coax) at probe A**

The analog baseband standard definition NTSC color video originating from LRU 3 and received and processed (digitized) by LRU 1 with a 6 MHz bandwidth. Resolution of A-to-D converter in LRU 1 is 4 mV. Thus max allowed noise up to 6 MHz is 2.8 mV_{rms}. Typically it is acceptable if this increases at a rate of 40 dB/decade above the signals bandwidth (6 MHz) up to 1 volt.

---

[11] National Television Standard Committee (NTS) Digital Video (DV) 525 lines, 480i effective display.
[12] Theoretical channel capacity = 2 x Bandwidth x $\log_2(M)$, where M = number of signaling levels.
[13] Minimum theoretical S/N = $M^2 - 1$ for stationary noise.

Figure 4.4.9-2 is a plot of predicted interference that would be present at the at the input to A/D converter in LRU 1. The allowable noise is also plotted. As we see from this plot, unsatisfactory system performance can be expected unbalanced analog video link in the harsh CS114 environment.

3) **100BaseTX Ethernet between probes H &N and probes C & C1**

For 100BaseTX Ethernet, IEEE 802.3 clause 25.4.6.3.1 limits differential noise at the receiver to 40 mV p-p for frequencies up to 100 MHz under signal loss conditions of clause 25.4.6.2.1 (Loss = 2.1 $F^{0.529}$ + 0.4/F dB between 1 and 100 MHz). Due to the relatively short nature of the cable in this example, the loss is only 4 dB (see Figure 4.4.7-3). Thus the allowable noise can be increased by 2.1 $F^{0.529}$ + 0.4/F – 4 dB.

Figure 4.4.9-3 is a plot of predicted interference that would be present at the input of the Ethernet receivers in LRU 2 and LRU 1 after the transformer-CM choke. The allowable noise per predicted signal attenuation is also plotted along with allowable noise under maximum allowed signal loss. As we see from this plot, satisfactory system performance in the harsh CS114 environment is expected.

4) **DC Prime Power to LRU at probe J**

If the power conversion and decoupling capacitors at individual integrated devices in LRU 2 are assumed to provide at least 20 dB of noise attenuation between the prime power filter output (probe J) and the power input to the device containing the most susceptible circuit (analog video at probe K), then the allowable noise at probe J would be 20 dB above what is allowed at probe K. Appling the criteria from 4.4.9.a.1) above, this would equate to 11 mV_{rms} + 20 dB = 110 mV_{rms}.

Figure 4.4.9-4 is a plot of predicted interference that would be present at the input to the power converter inside LRU 2 (probe pint J). Also plotted is the allowable noise, adjusted for expected filtering provided by the power conversion and distribution system inside LRU 2 (20 dB) with respect to the most sensitive circuit. As we see from this plot, there is some performance concern between 5 and 10 MHz.

4.4.10. Implement Needed Design Changes, Re-Run Simulation

A modeling and simulation effort may identify design deficiencies with respect to the intended environment. Before replacing the environment entity block (e.g. CS114) with a different environment entity block (e.g. CS115) to complete the modeling and analysis effort, it may be prudent to stop and investigate design changes needed to allow compliant operation under the current environment of interest. Design modification may include electrical changes to I/O circuits, cable shield grounding, circuit grounding, cable shield type and quality, as well interface format.

Clearly in this example there are design deficiencies associated with the analog unbalanced analog video link and the 14 VDC power provided to LRU 2.

Modifications suggested for the unbalanced analog video link include inserting a video isolation transformer at LRU 1 and LRU 3 to reduce the flow of interference current on the coax shield. Also, the modification included changing the coax cable from a type RG-58 to a type RG-212, which offers better shielding.

Modifications suggested for the 14 VDC power circuit include the addition of a high frequency filter capacitor (1 uF w/ ESR = 0.05 ohms and $F_{self_resonance}$ = 12 MHz) at probe point J to improve the power input filter at LRU 2.

The following processes are used to analyze design improvement.

a. Make changes to circuit design and/or cable to address potential susceptibilities identified above (Figures 4.4.10-1 and -2). Note that the S-parameter simulations for the desired signal paths should be repeated if circuit and/or cable changes are expected to change the channel bandwidth. The bandwidth must be adequate for the desired signal.
b. Re-run simulations with EMC changes included.
c. Reprocess the results, while retaining the original results for comparison purposes.
d. Add the curves for the predictions of interference with the modified design to the existing plots of performance with the original design (Figures 4.4.10-3 and 4.4.10-4).

   We observe from Figure 4.4.10-3 that notable improvement is made to the analog video link, However, the predicted interference is still somewhat excessive above 4 MHz. A coax cable with better shielding than RG-212 would require a connector changes as well as changes to the overbraid on cable between LRU 1 and LRU 3 due to an notable diameter increase. Since 480i NTSC video can be transmitted in a 4 MHz bandwidth, it may be possible to modify the sending and receiving circuit to utilize only 4 MHz instead of 6 MHz to reduce interference risk. Also, given the harsh EMI environment, the modeling and simulation may support the change of the video interface from unbalanced to balanced.

   It is also observed that the filter capacitor added to the LRU 2 power circuit was successful in reducing the interference to acceptable levels.

5. SUMMARY AND CONCLUSIONS

It was shown how the system level electromagnetic environment that a military vehicle may be exposed to can be translated to a set of environments applicable to equipment, subsystems and cable assemblies. These environments are quantified with physical set up conditions to allow compliance verification by test and/or analysis at the equipment or subsystem level with representation of the applicable vehicle cable/connector assemblies.

Electrical and mathematical models were developed and presented for the susceptibility environments applicable to cable/connector assemblies. The specific environments for military ground vehicles were MIL-STD-461F CS114, CS115, CS116, RS103 and RS105. They present radio frequency environments in the frequency domain and the time domain, as well as transients directly coupled to cable harnesses.

It was shown how an "entity block" approach to modeling and simulation can be used to allow model reuse and construction of the models for various parts of the problem space simultaneously and independently to provide greater throughput than previously realized before the availability of co-simulation features in electromagnetic effects analysis tools. Details of the entity block approach were presented. Methods of specifying and modeling each type of entity block with respect to state-of-the-art electromagnetic compatibility focused simulation tools were developed.

Since immunity to electromagnetic effects as applied to cable/connector assemblies is greatly influenced by the design of the cable's shielding, the topic of transfer impedance was discussed. Methods of measurement, specification and input to simulation tools were provided.

Finally, a very detailed example involving the application of a harsh conducted RF susceptibility environment to a multi-branch cable assembly was presented to illustrate the entity block approach to electromagnetic simulation for complex systems. The example included not only the application of the environment model, but also construction of the cable harness, connector assemblies, shield terminations, EMI filters and active I/O device models for integration into a co-simulation environment. The realistic subsystem modeled included power, analog video, digital video, and digital high-speed data interfaces using cable types and shielding typical of what may be found in military vehicles. The results of the modeling and simulation illustrated some very important and basic system EMC design principles, most notable being the benefits of balanced interfaces, digitization of analog signals at the source, grounding methods to control the interference current flow through cables, and the importance of high-quality filter components.

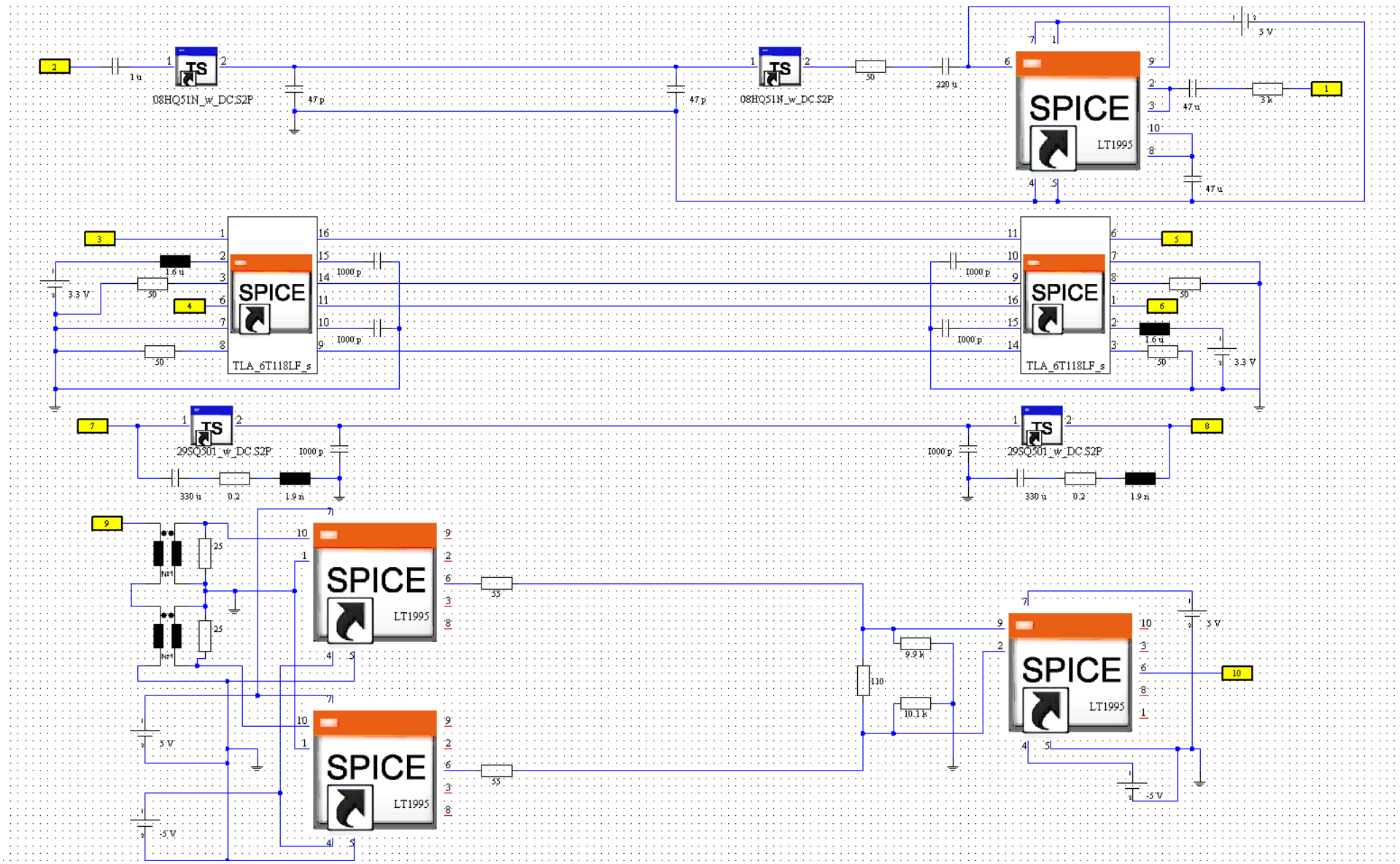

Figure 4.4.1-1. I/O and Signaling Schematic with Common Ground - CST Design Studio

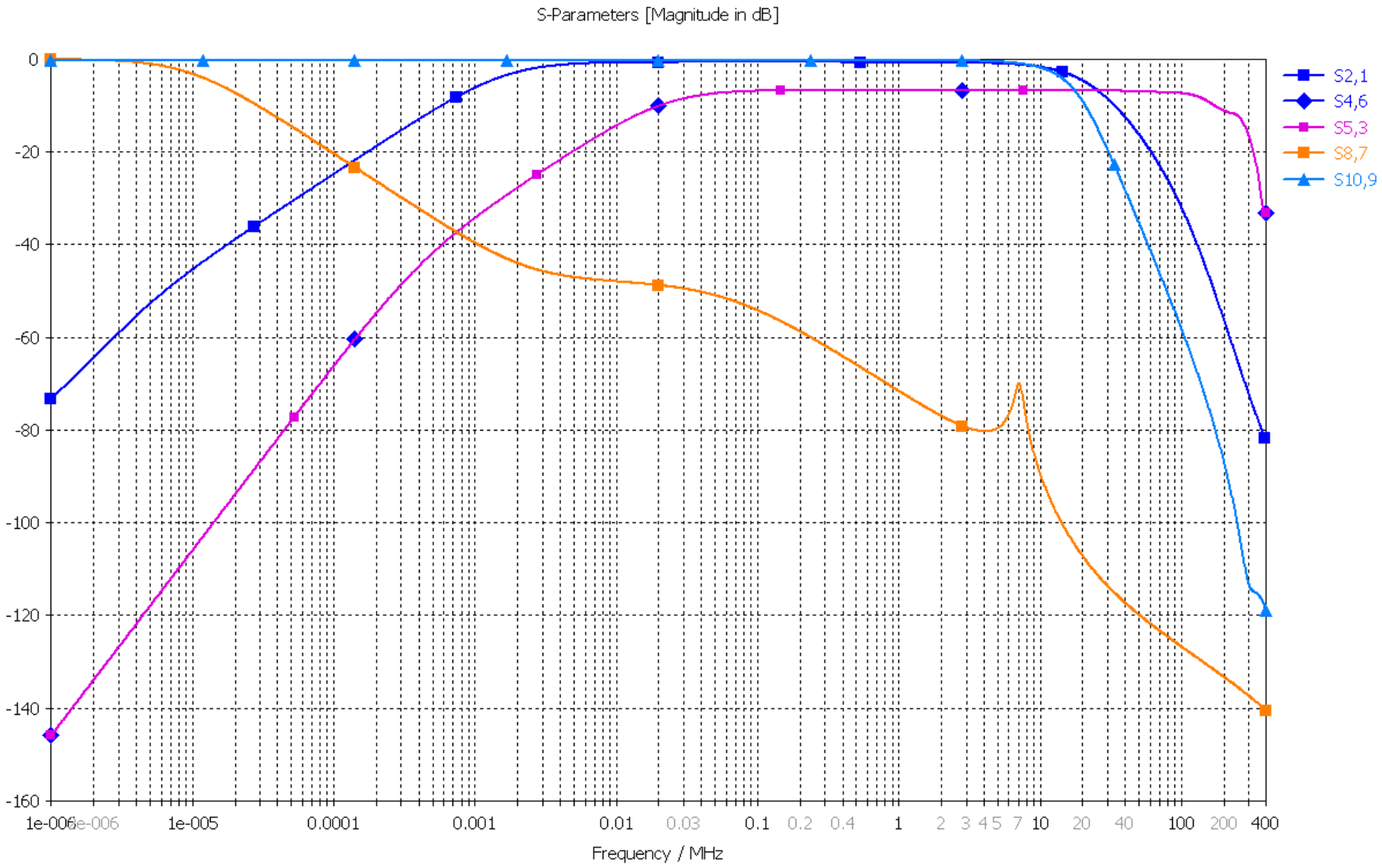

Figure 4.4.1-2. I/O and Signaling Schematic with Common Ground – Results - Gain in Desired Direction

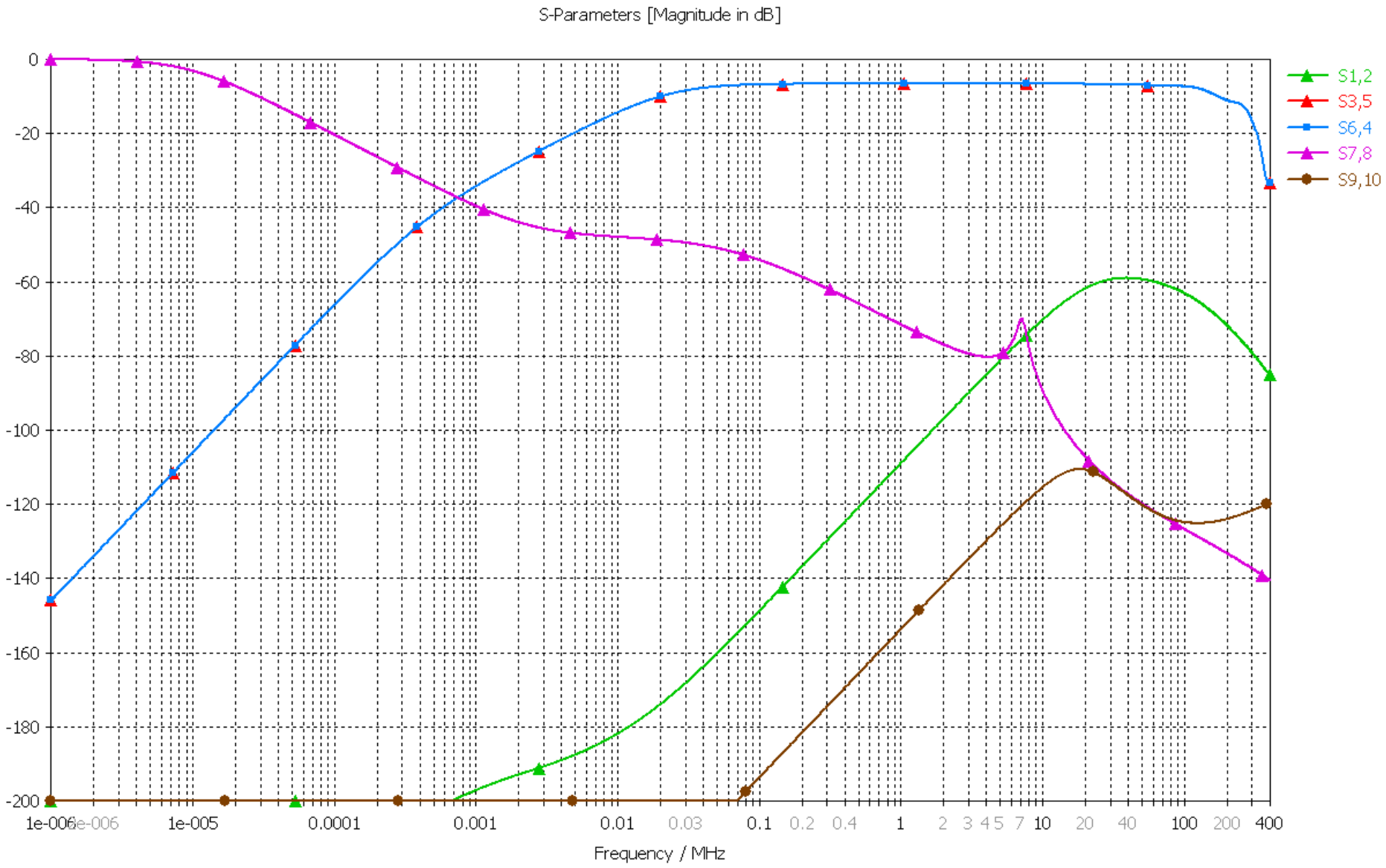

Figure 4.4.1-3. I/O and Signaling Schematic with Common Ground – Results - Gain in Reverse Direction

C2M2L

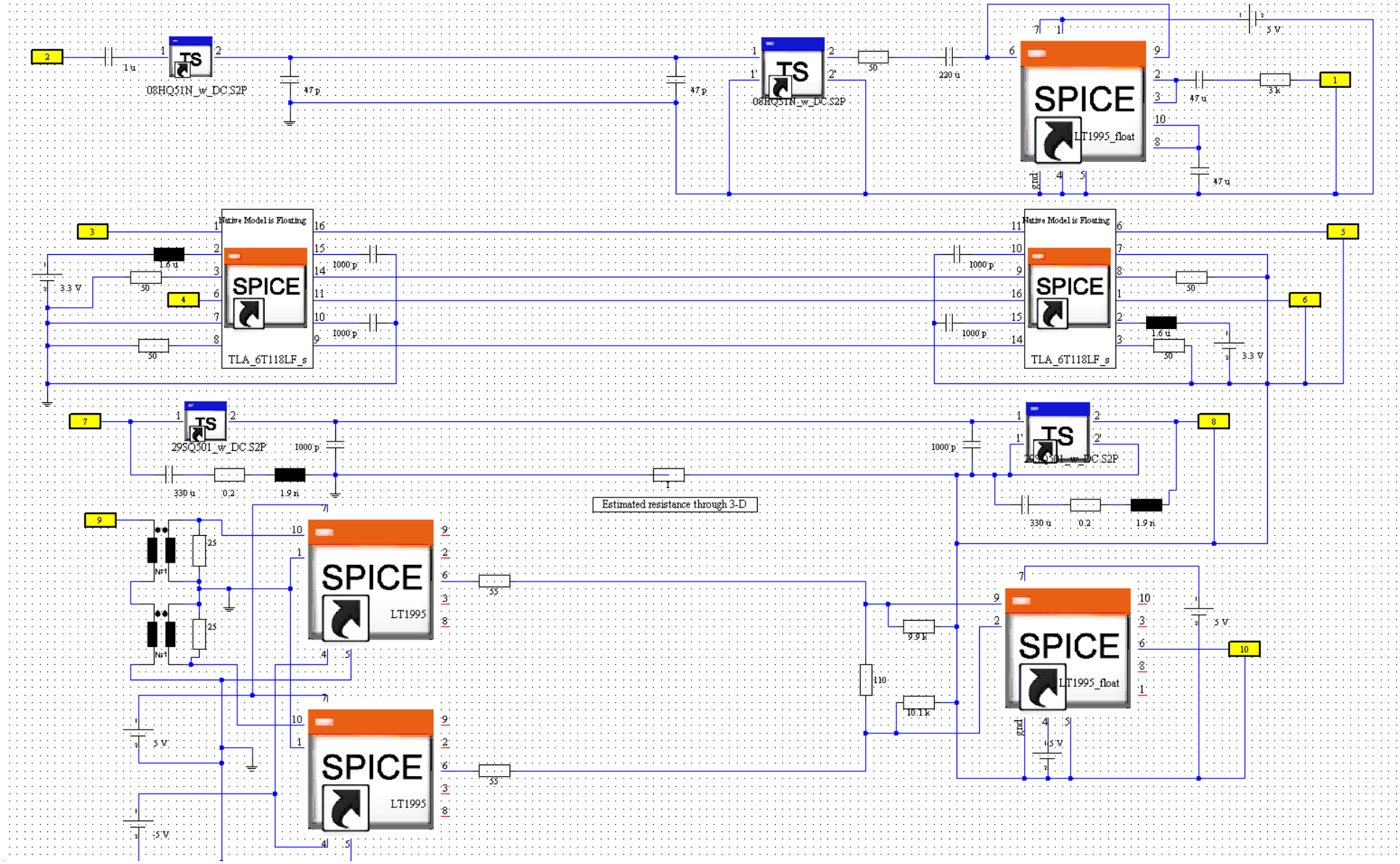

Figure 4.4.2-1. I/O and Signaling Schematic with Target System Floating Grounds - CST Design Studio

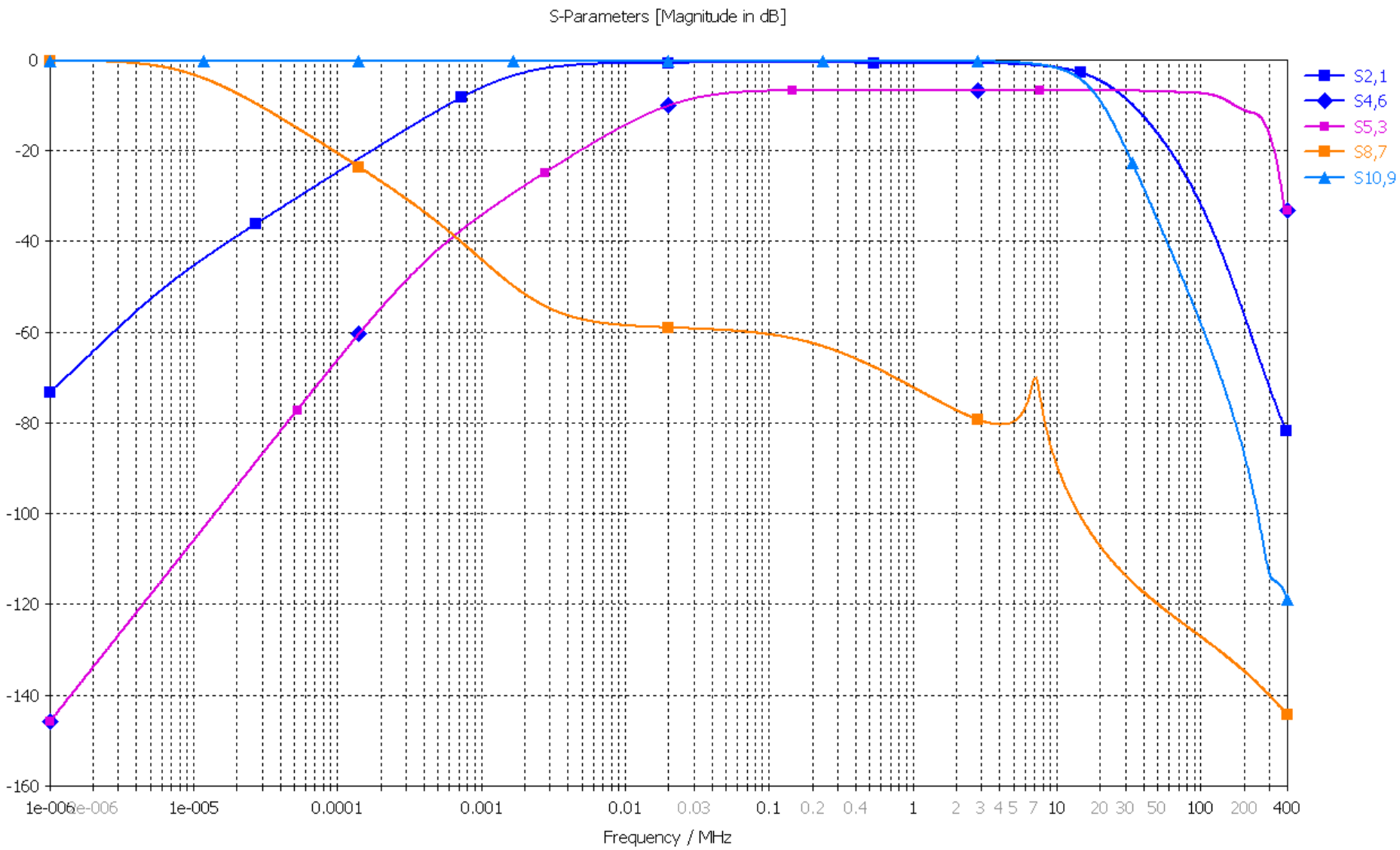

Figure 4.4.2-2. I/O and Signaling Schematic with Target System Floating Ground – Results - Gain in Desired Direction

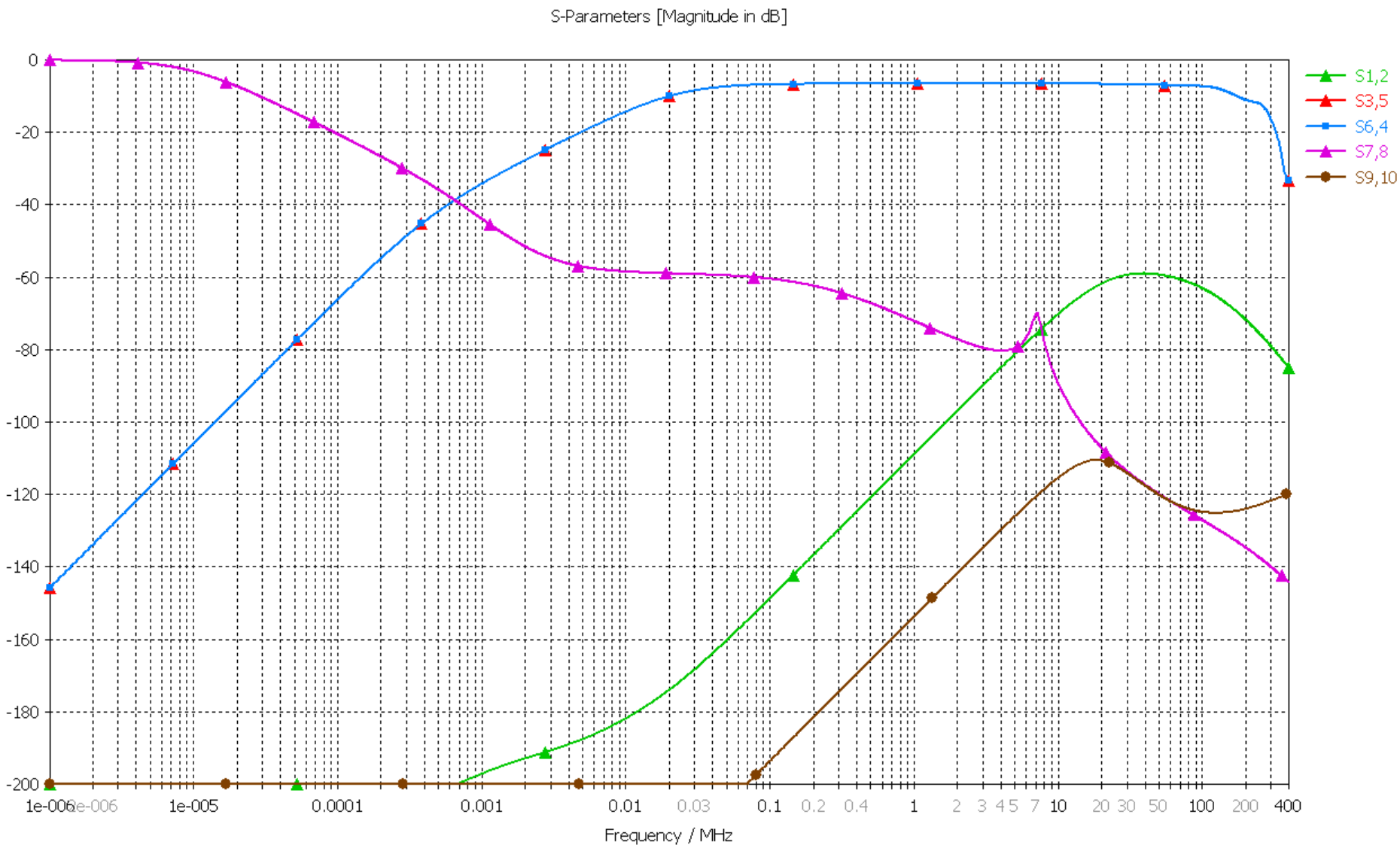

Figure 4.4.2-3. I/O and Signaling Schematic with Target System Floating Ground – Results - Gain in Reverse Direction

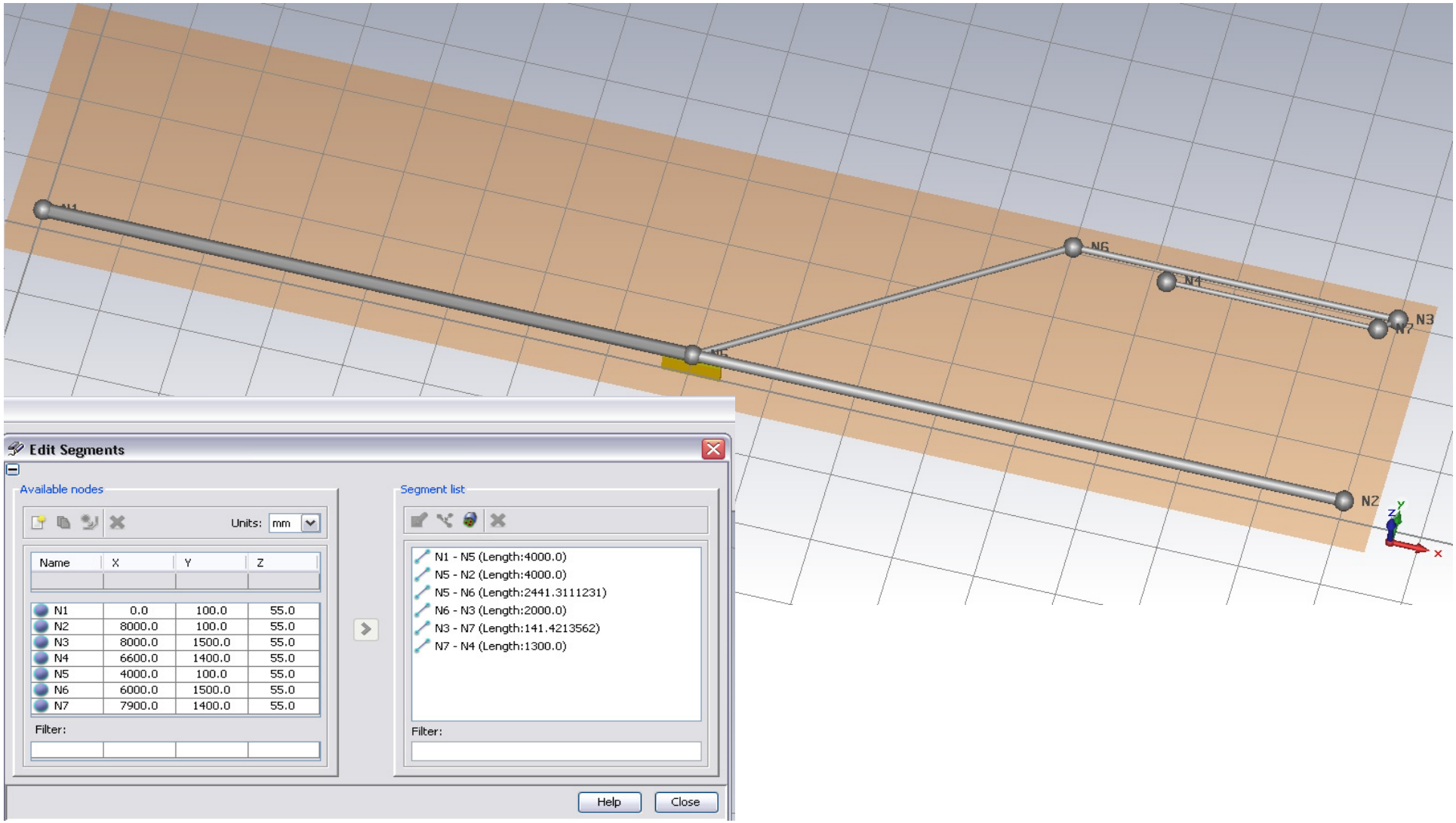

Figure 4.4.3-1. Cable Harness Layout and Build – CST Cable Studio

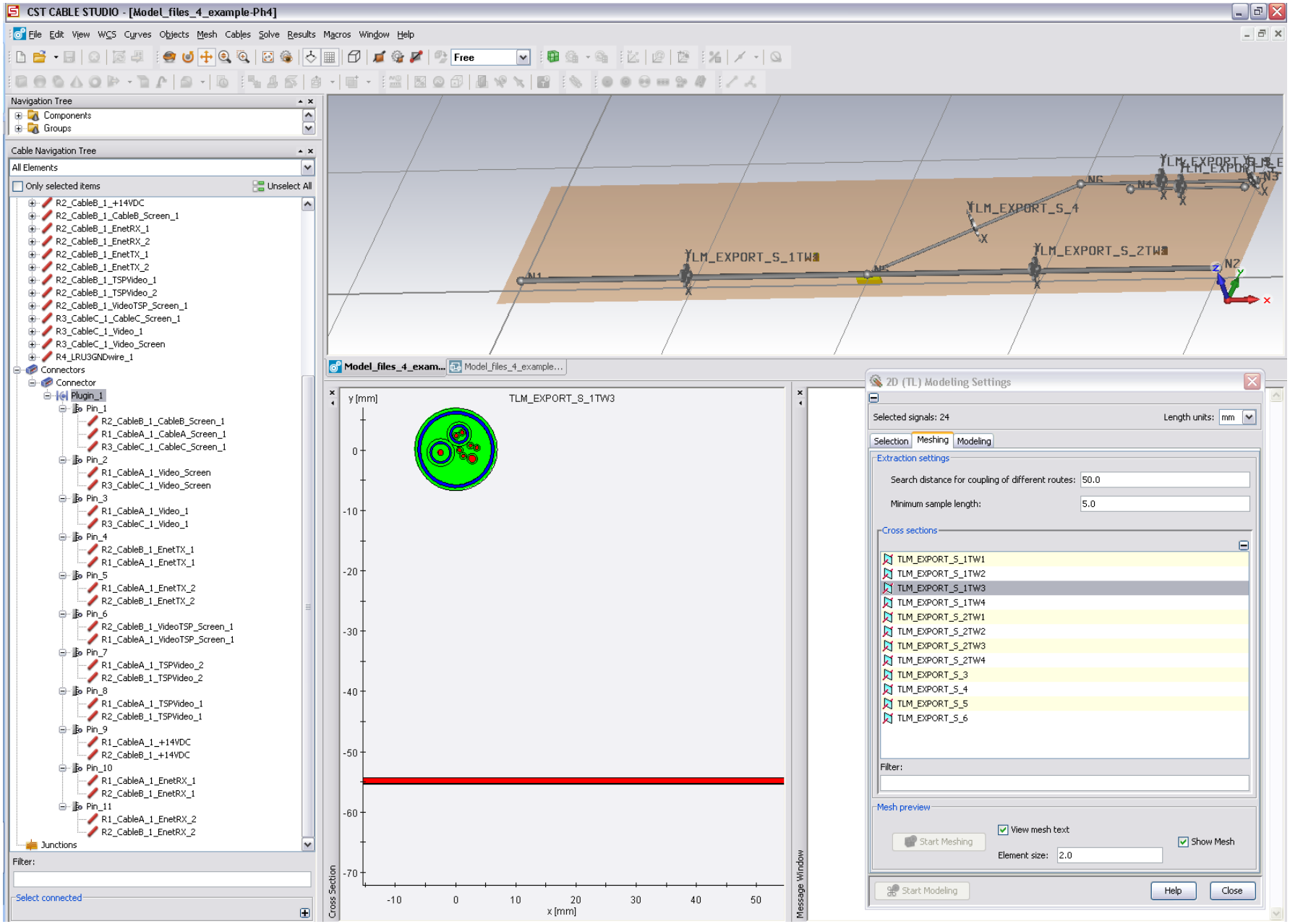

Figure 4.4.3-2. Cable Harness Build and Connections – CST Cable Studio

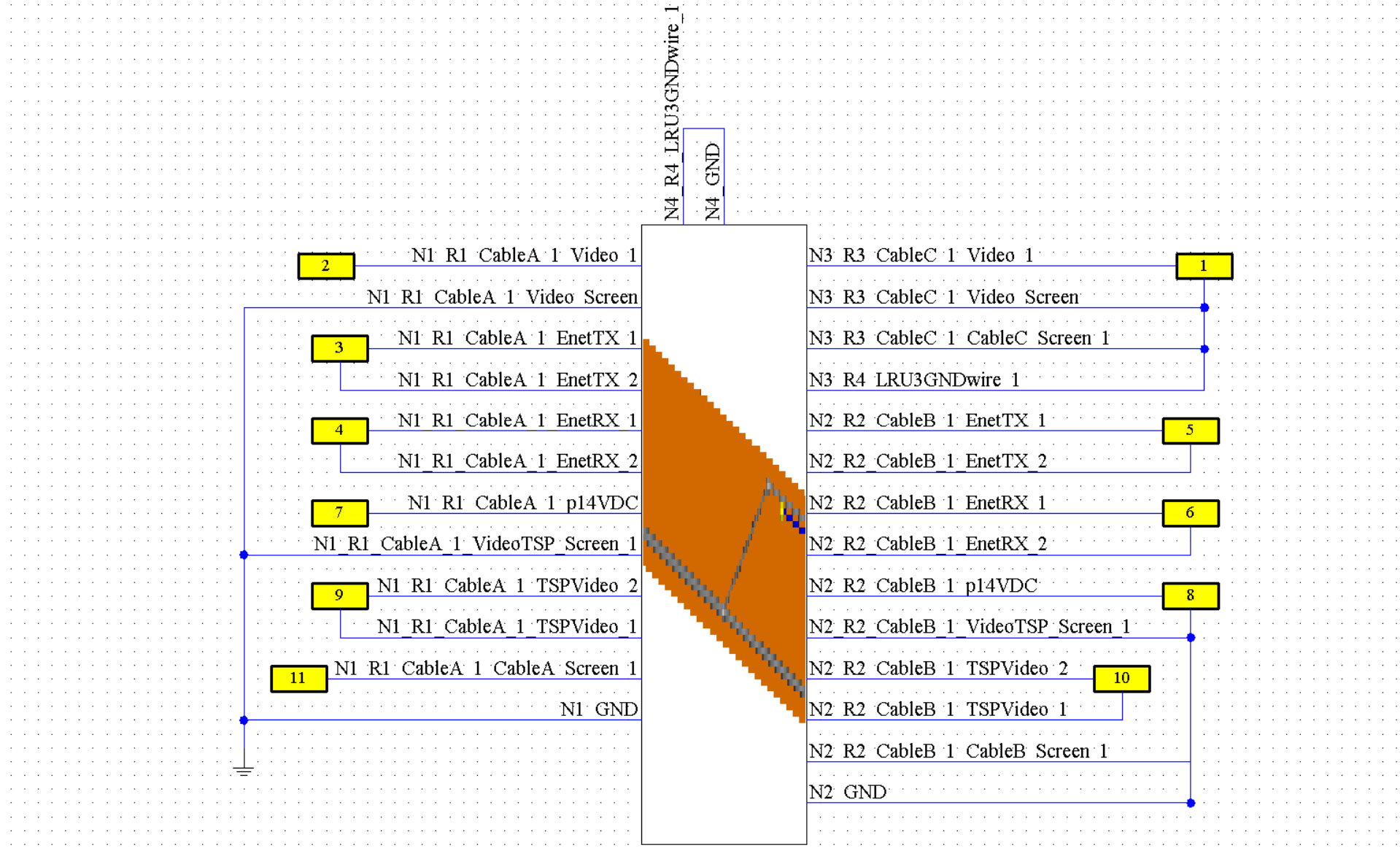

Figure 4.4.3-3. Cable Harness Imported in to Co-Simulation Framework for Transfer Checkout

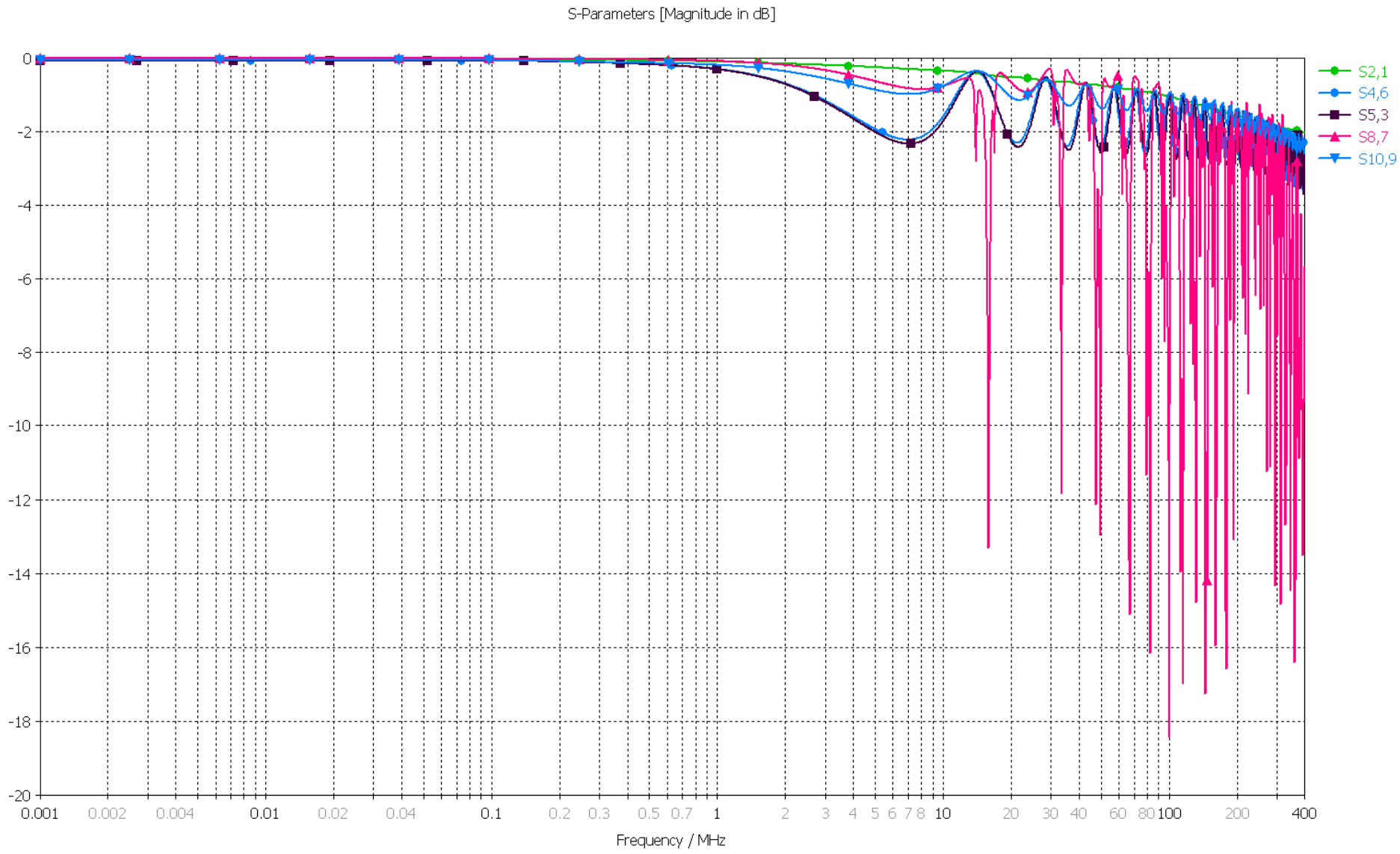

Figure 4.4.3-4. Cable Harness Signal Transfer Simulation – Desired Path Transfer

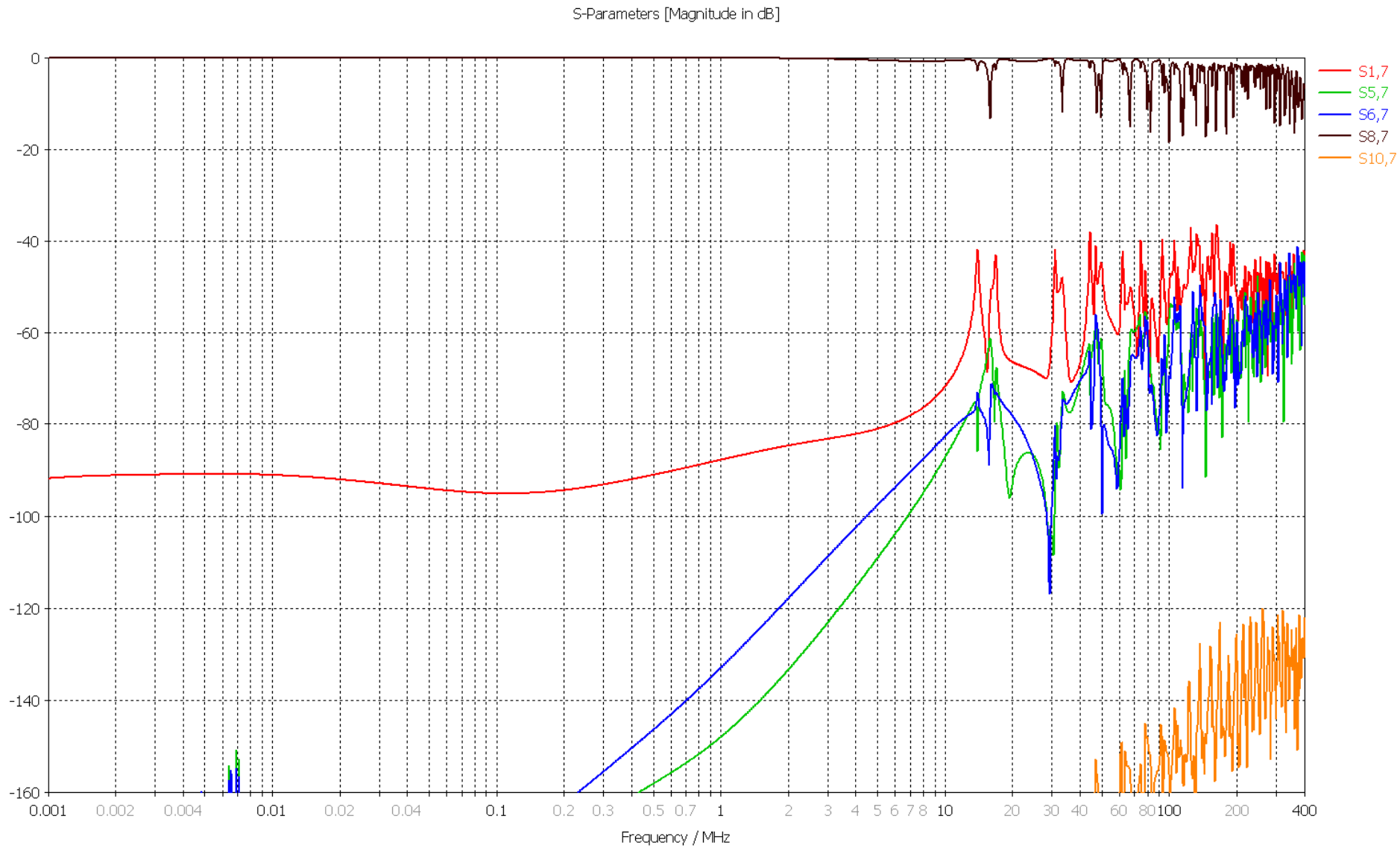

Figure 4.3-5. Cable Harness Signal Transfer Simulation – Cross-talk

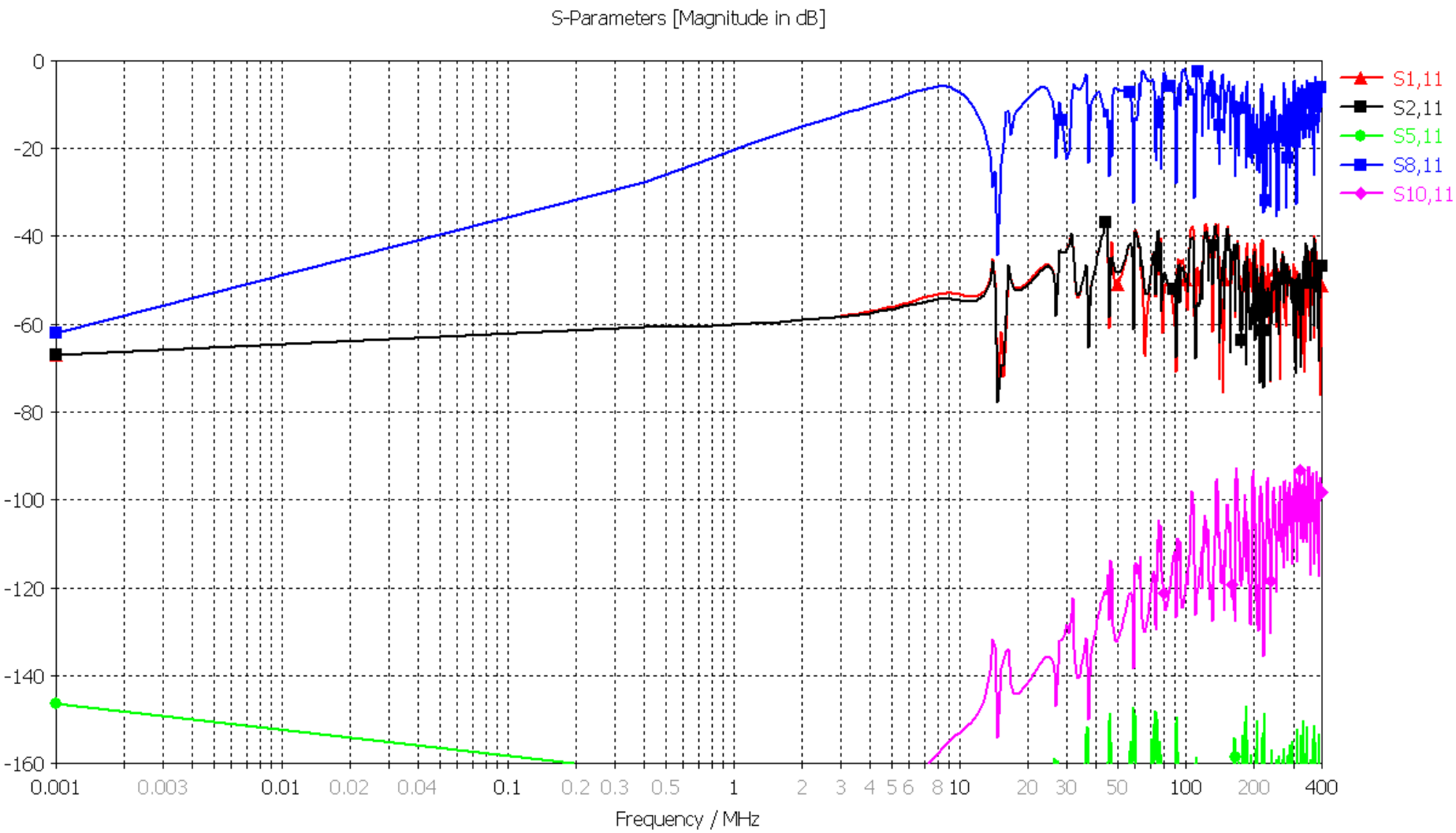

Figure 4.4.3-6. Cable Harness Signal Transfer Simulation – Coupling From Overshield

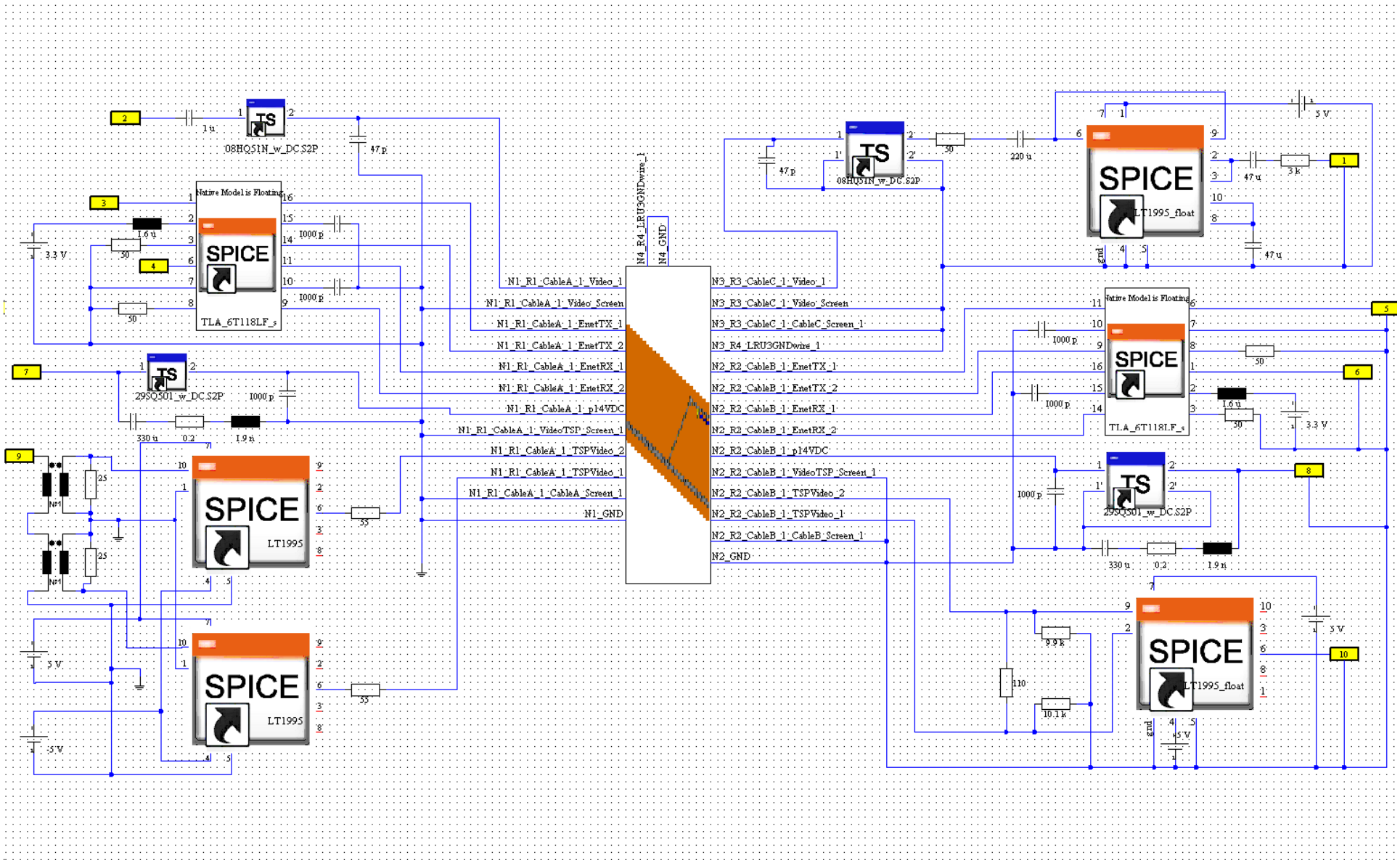

Figure 4.4.4-1. Cable Harness and Interface Circuits Imported in to Co-Simulation Framework for Transfer Checkout

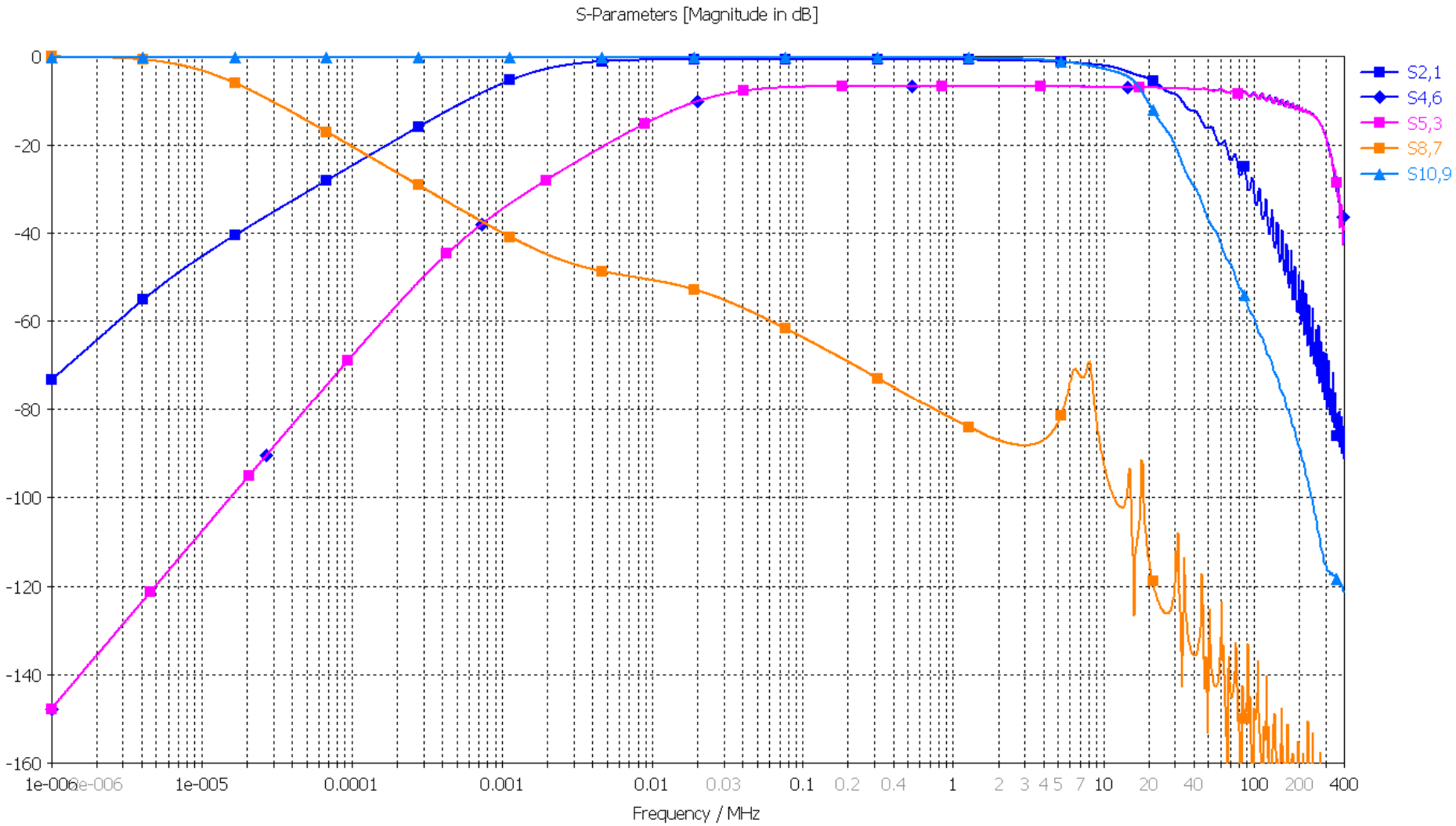

Figure 4.4.4-2. Cable Harness with Interface Circuits Signal Transfer Simulation – Desired Path Transfer

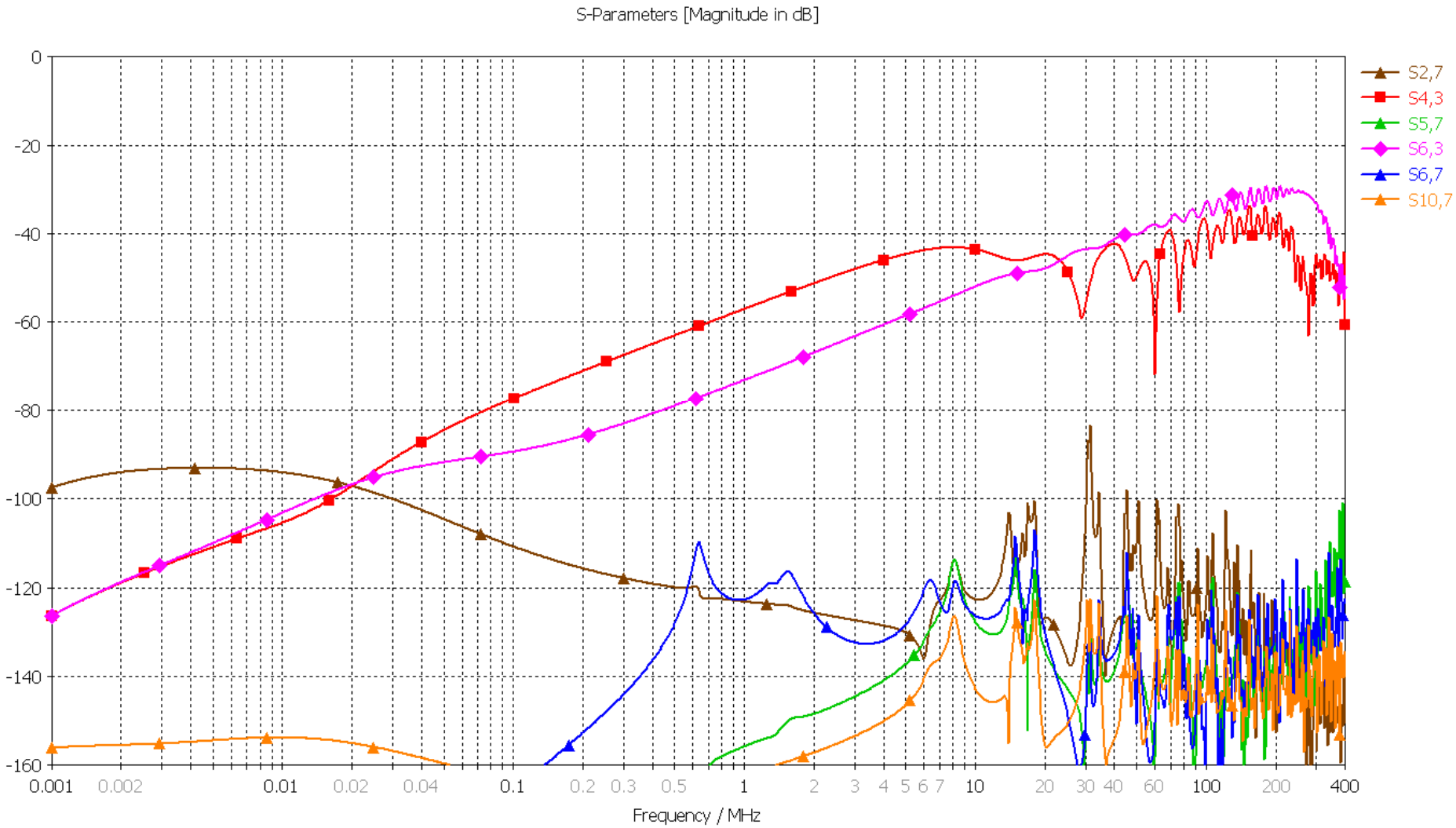

Figure 4.4.4-3. Cable Harness with Interface Circuits Signal Transfer Simulation – Cross-talk

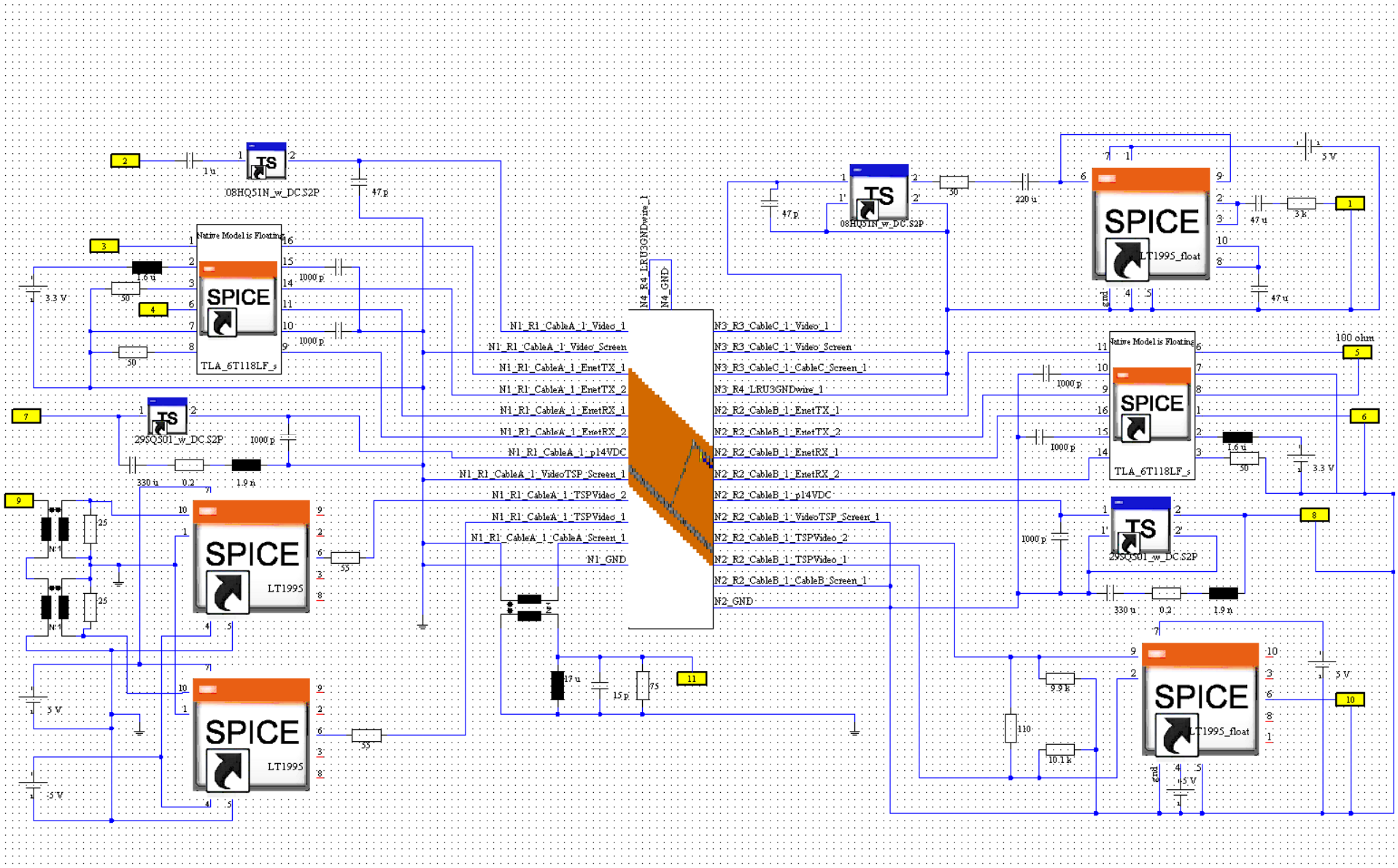

Figure 4.4.5-1. Cable Harness, Interface Circuits and CS114 Environment Imported in to Co-Simulation Framework for Transfer Checkout

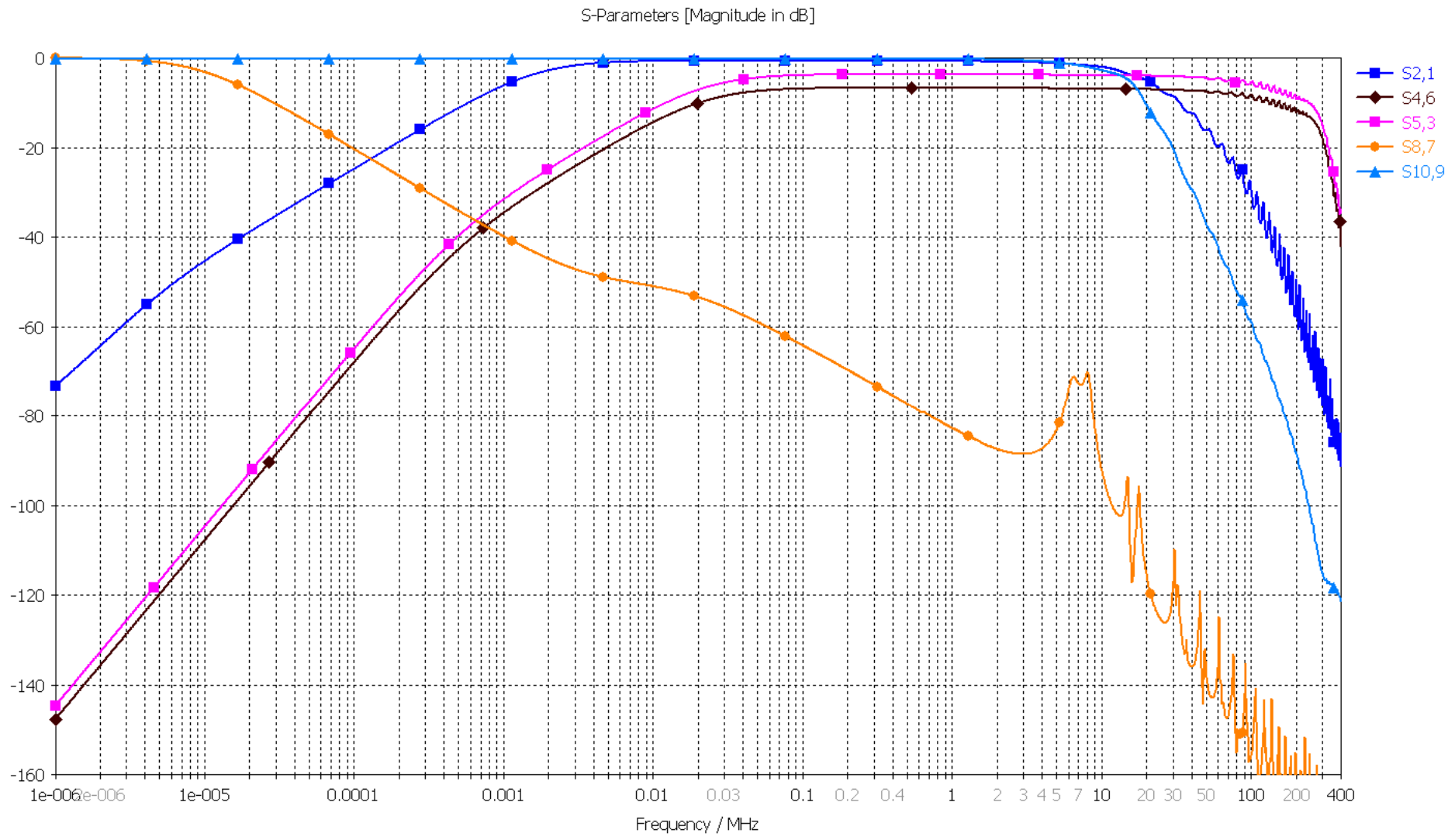

Figure 4.4.5-2. Cable Harness, Interface Circuits and CS114 Environment Signal Transfer Simulation – Desired Path Transfer

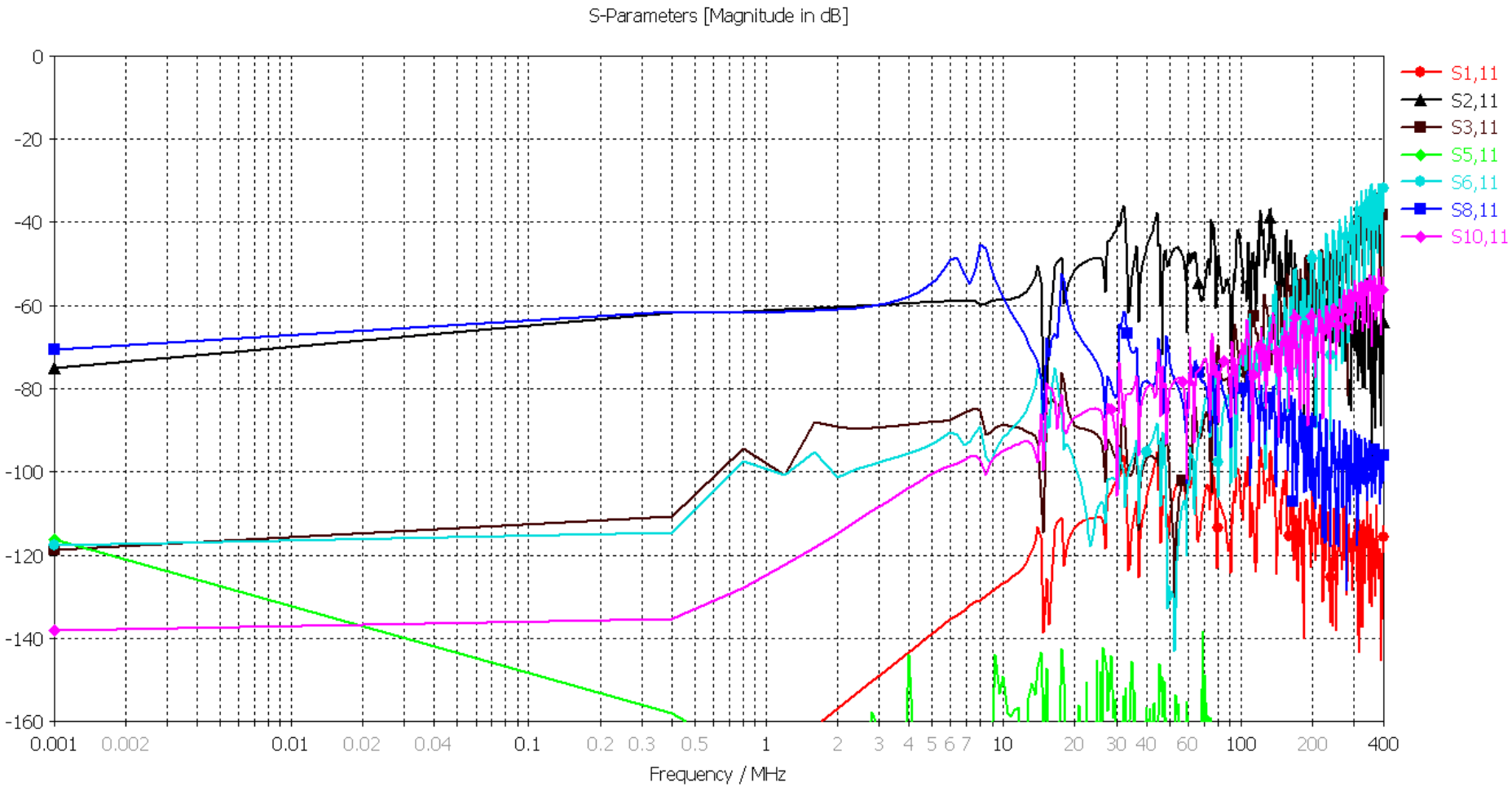

Figure 4.4.5-3. Cable Harness, Interface Circuits and CS114 Environment Signal Transfer Simulation – Coupling From Overshield

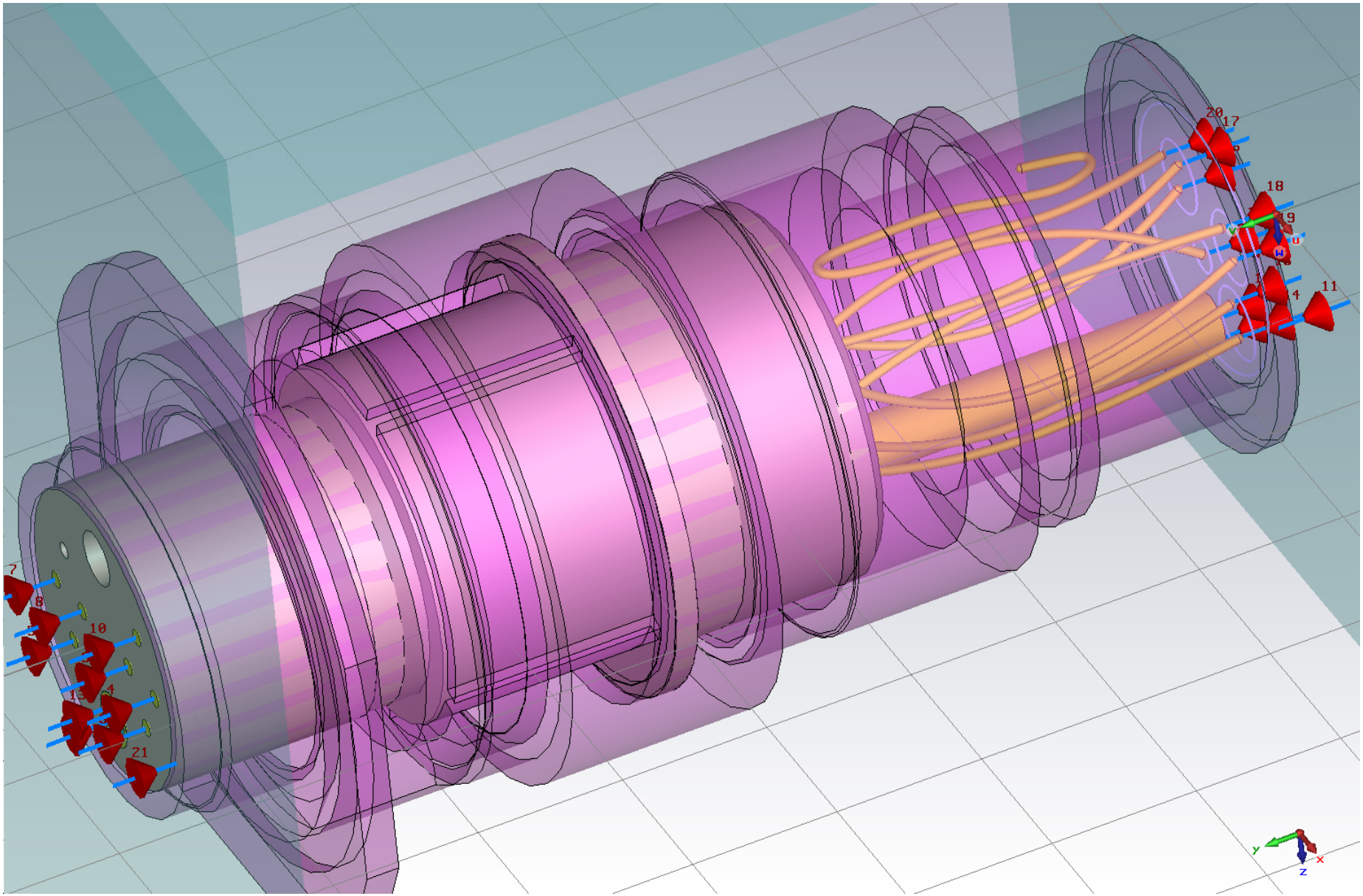

Figure 4.4.6-1. LRU 1 Connectors and Transition 3D Model - CST Microwave Studio

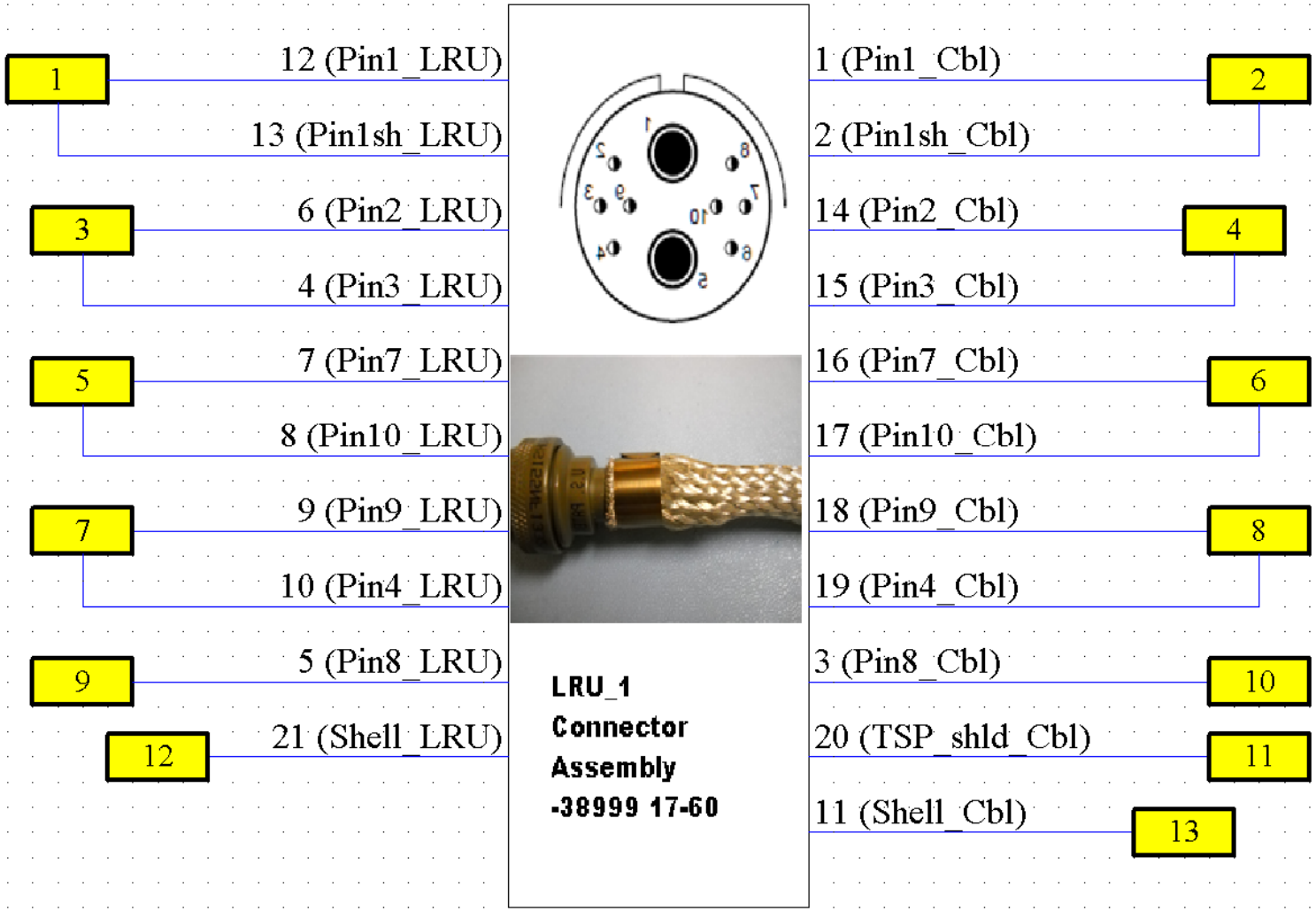

Figure 4.4.6-2. LRU 1 Connectors/Transition Block in Co-Simulation Framework for Transfer Checkout

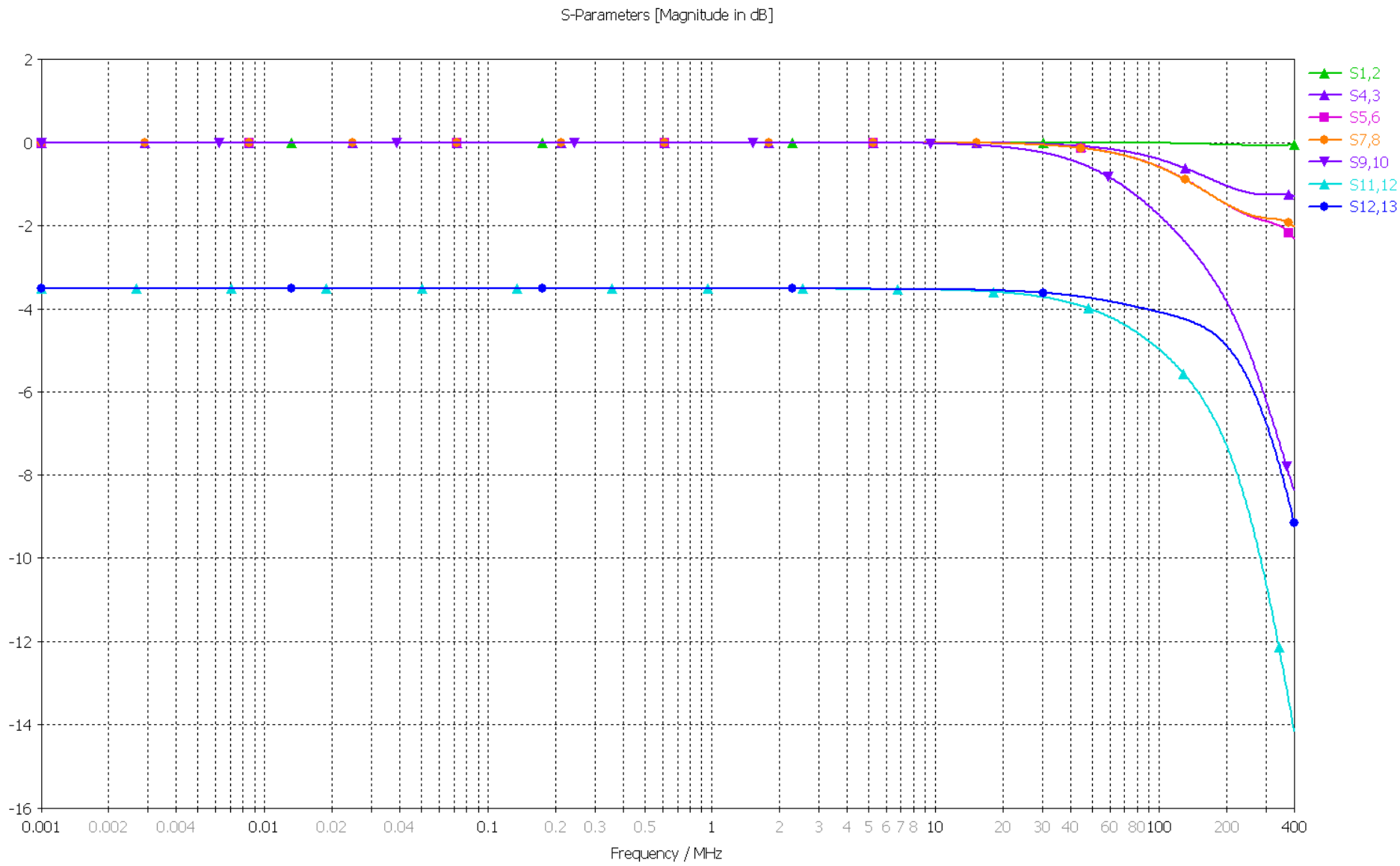

Figure 4.4.6-3. LRU 1 Connectors/Transition Block – Transfer through Desired Signal Paths

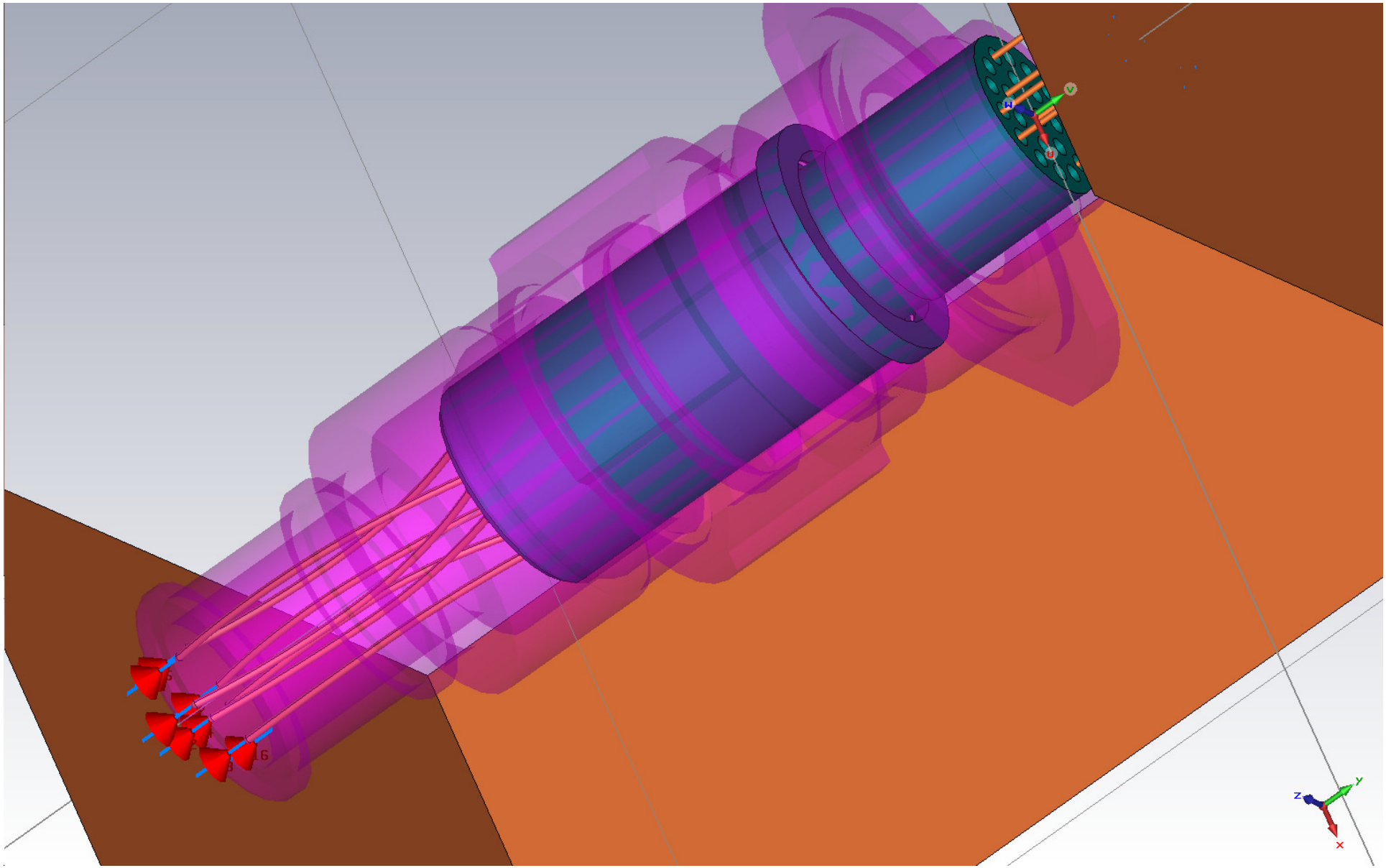

Figure 4.4.6-4. LRU 2 Connectors and Transition 3D Model - CST Microwave Studio

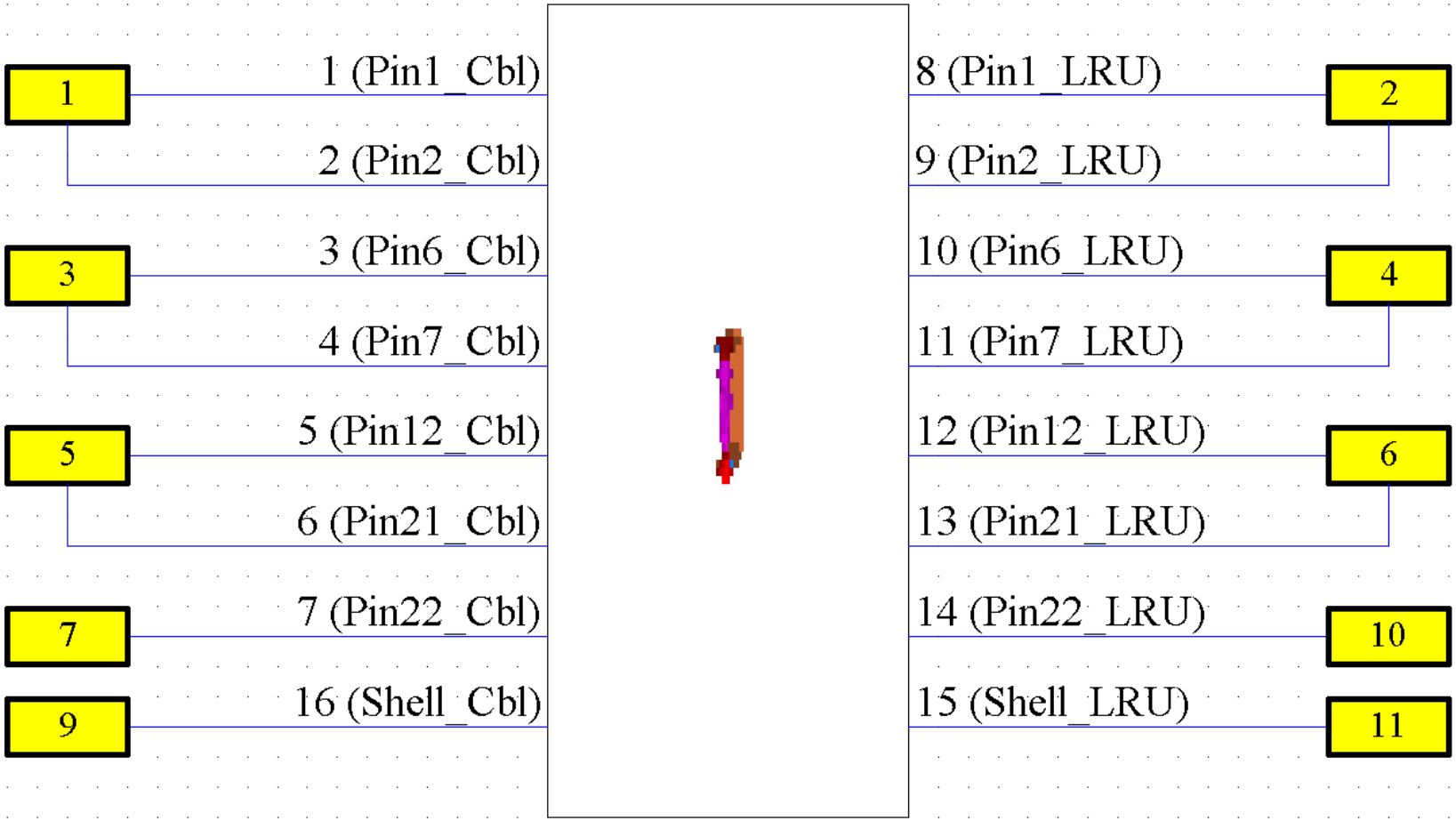

Figure 4.4.6-5. LRU 2 Connectors/Transition Block in Co-Simulation Framework for Transfer Checkout

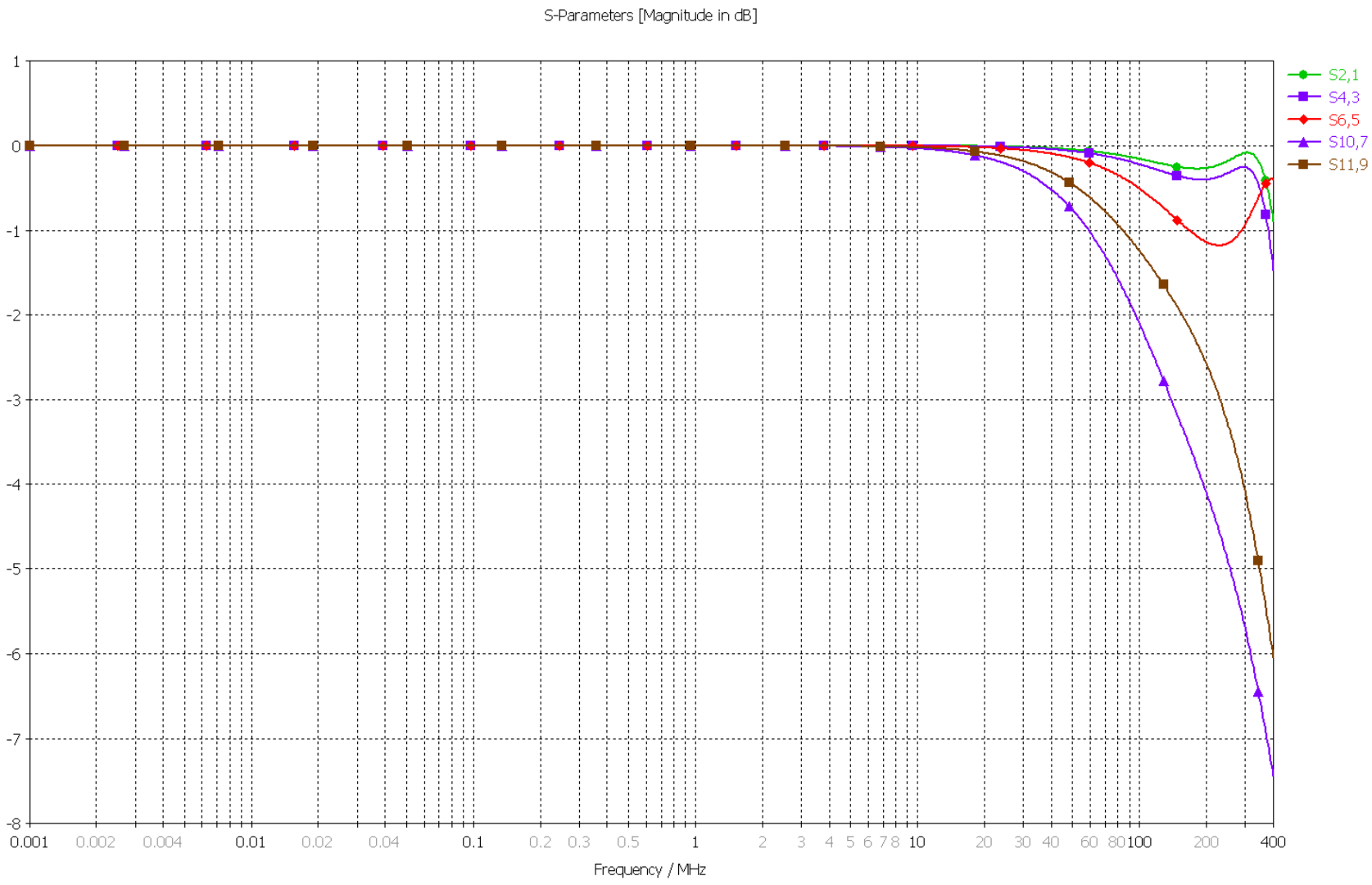

Figure 4.4.6-6. LRU 2 Connectors/Transition Block – Transfer through Desired Signal Paths

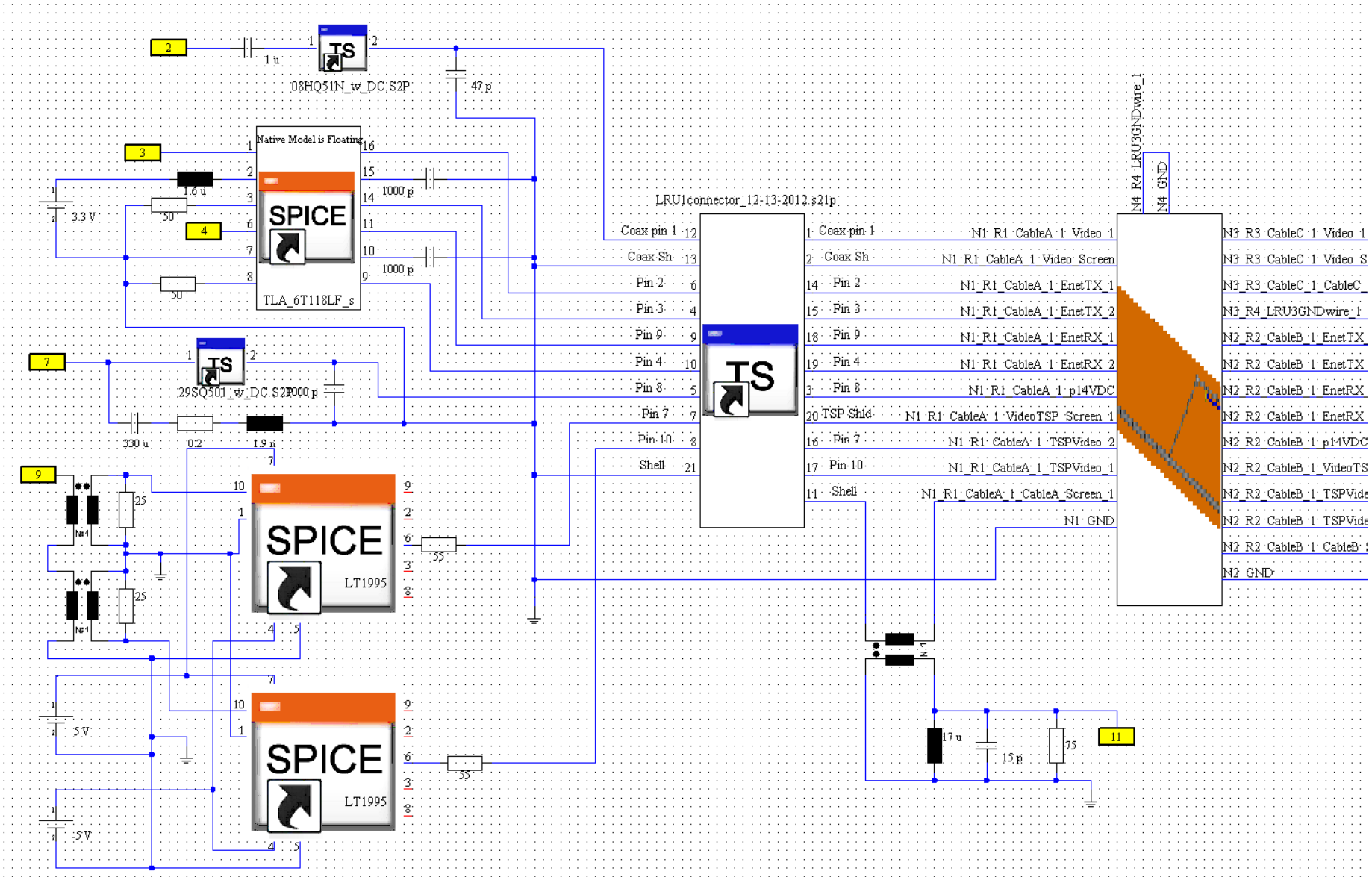

Figure 4.4.7-1. Cable Harness, Connectors, Interface Circuits and CS114 Environment Imported in to Co-Simulation Framework for Transfer Checkout - left side

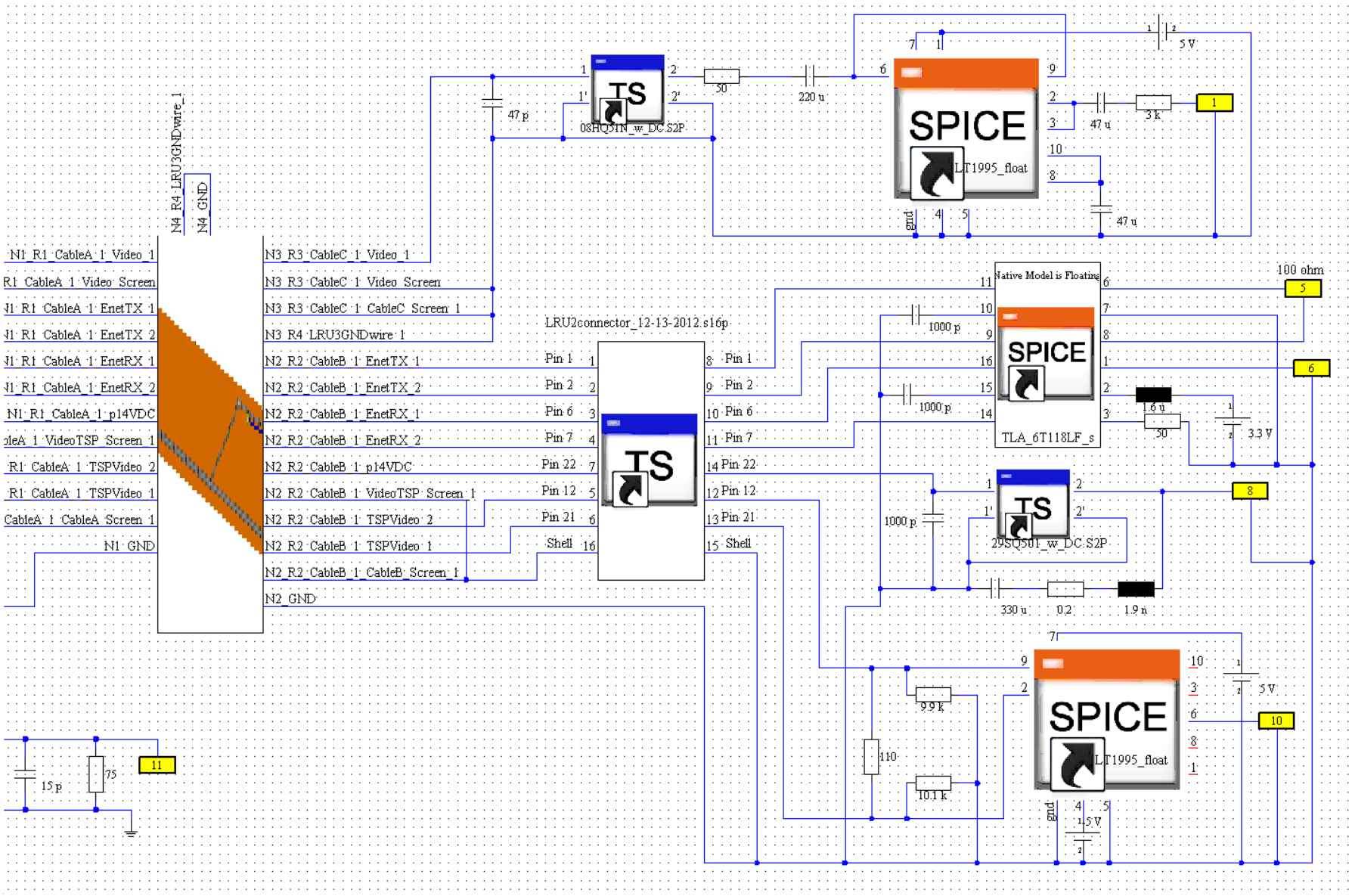

Figure 4.4.7-2. Cable Harness, Connectors, Interface Circuits and CS114 Environment Imported in to Co-Simulation Framework for Transfer Checkout – right side

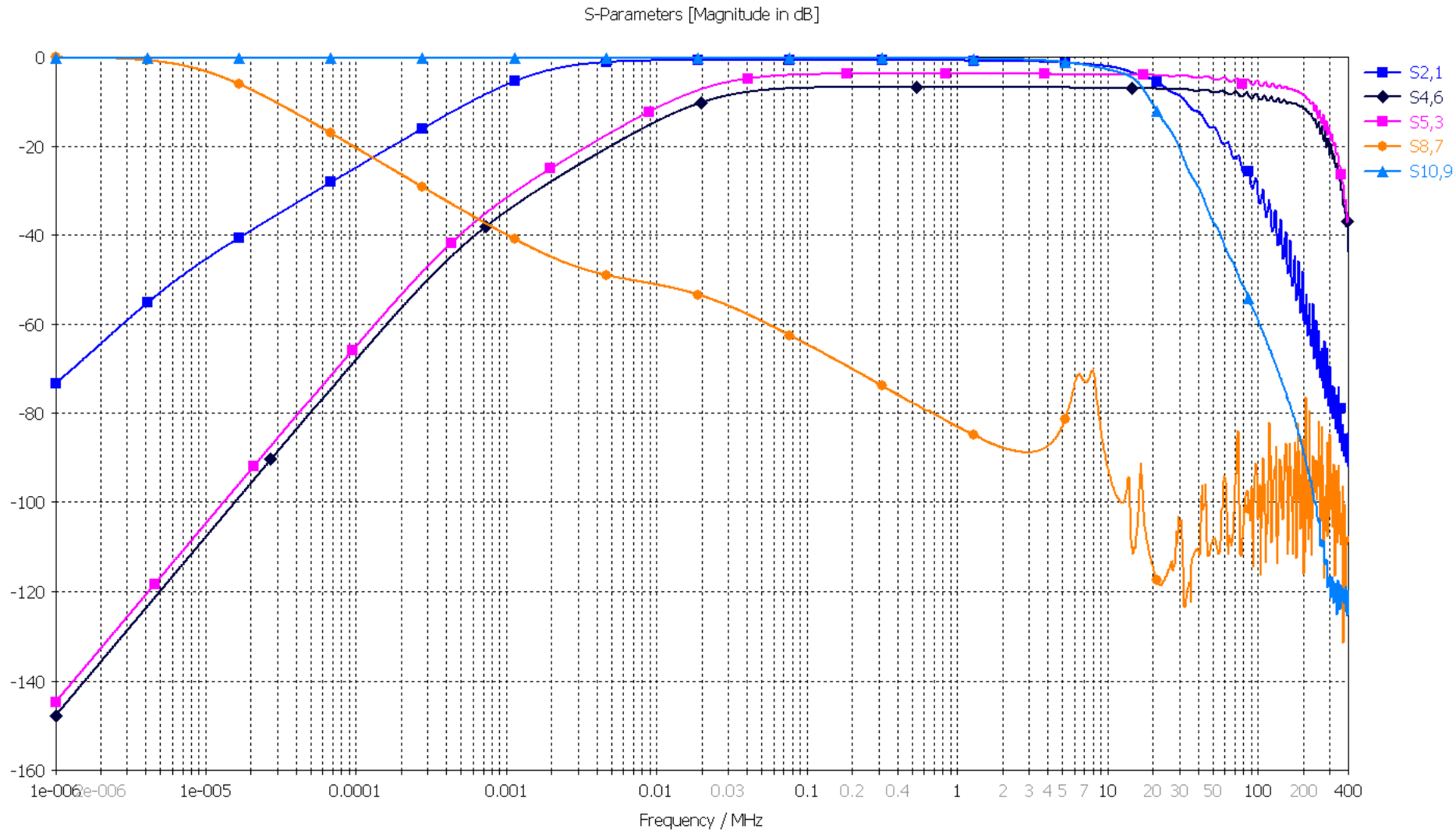

Figure 4.4.7-3. Cable Harness, Connectors, Interface Circuits and CS114 Environment Signal Transfer Simulation – Desired Path Transfer

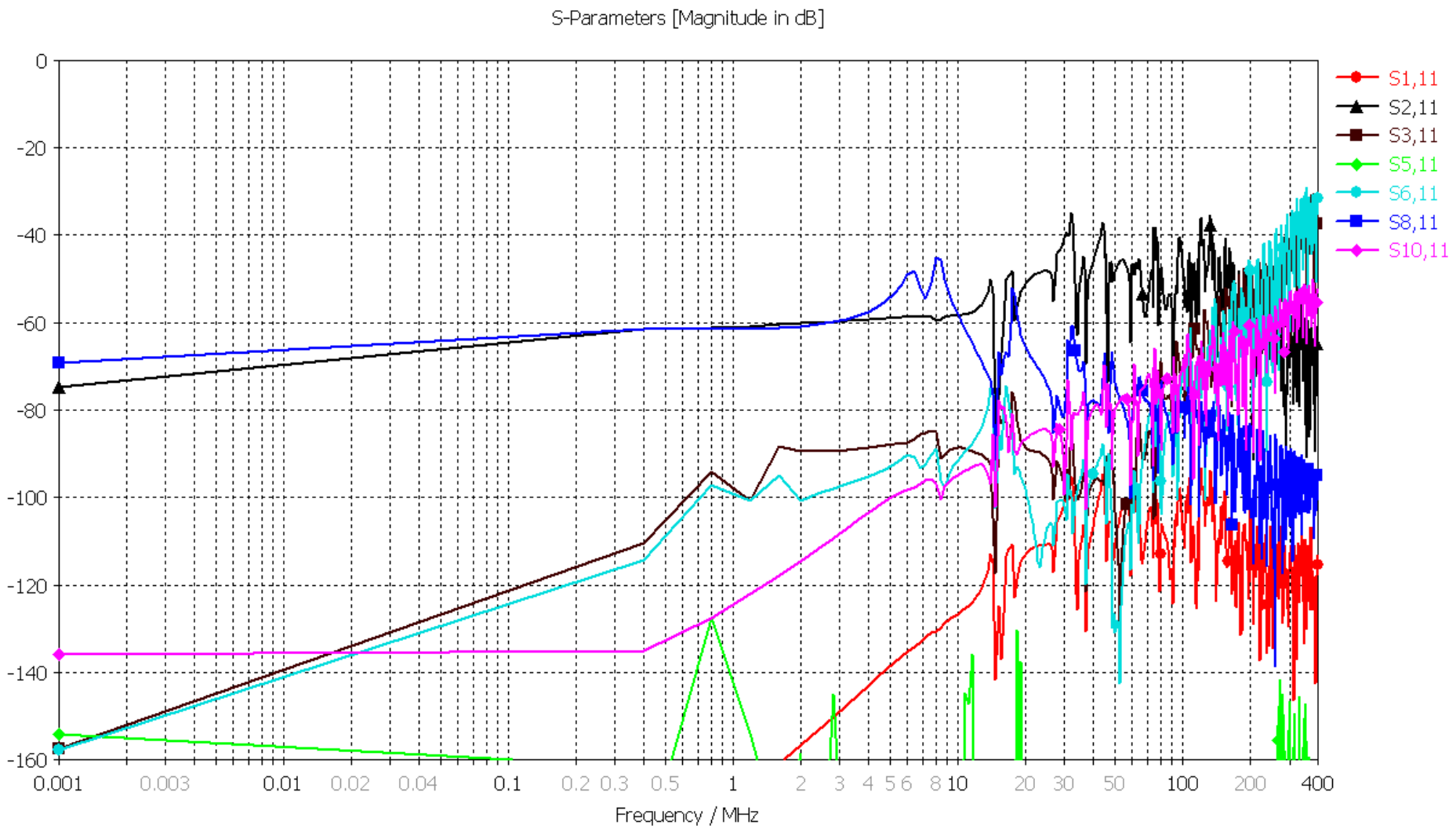

Figure 4.4.7-4. Cable Harness, Connectors, Interface Circuits and CS114 Environment Signal Transfer Simulation – Environment Transfer through Overshield

C2M2L

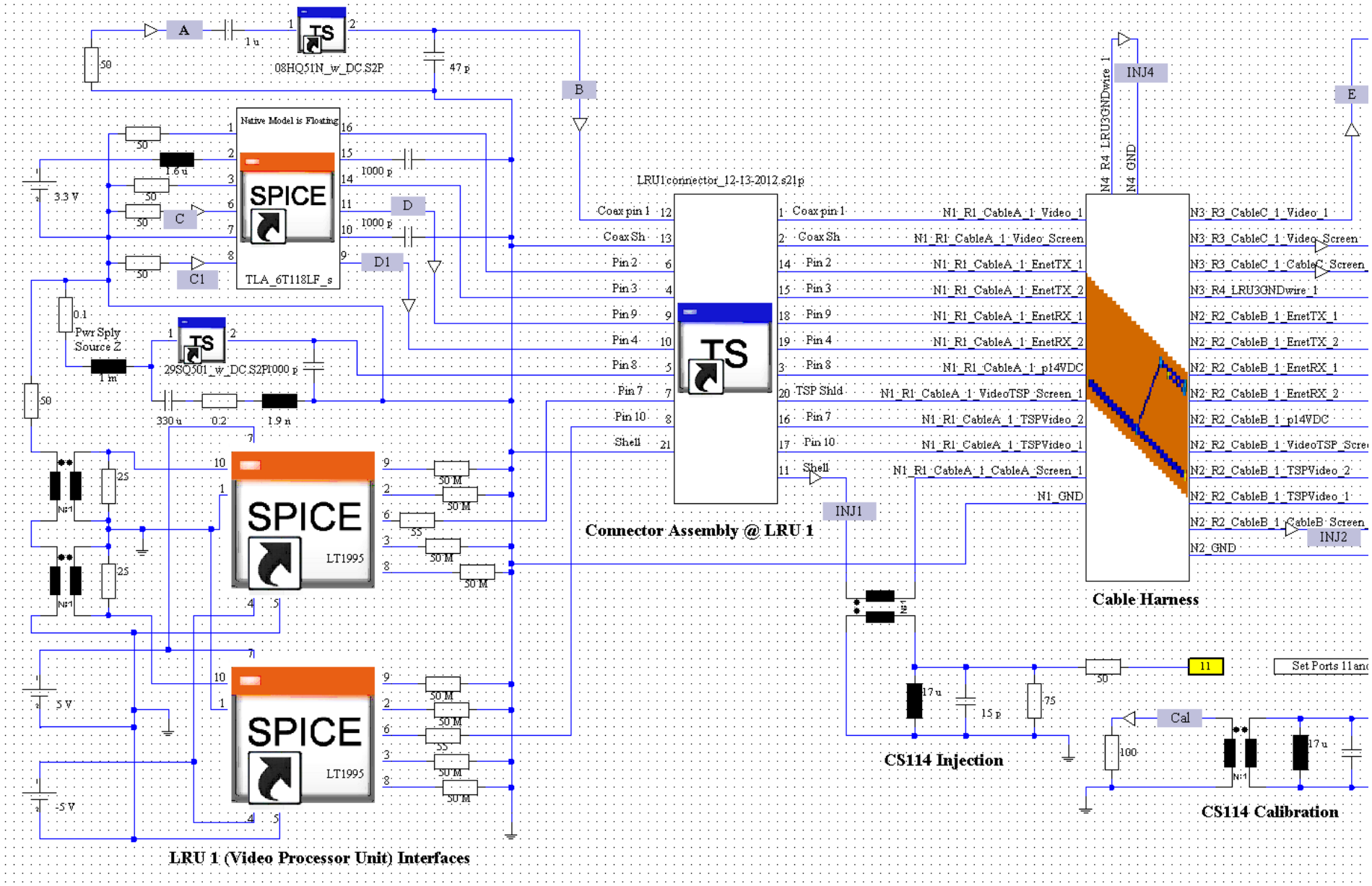

Figure 4.4.8-1. Complete System in Co-Simulation Framework for CS114 Simulation – left side schematic

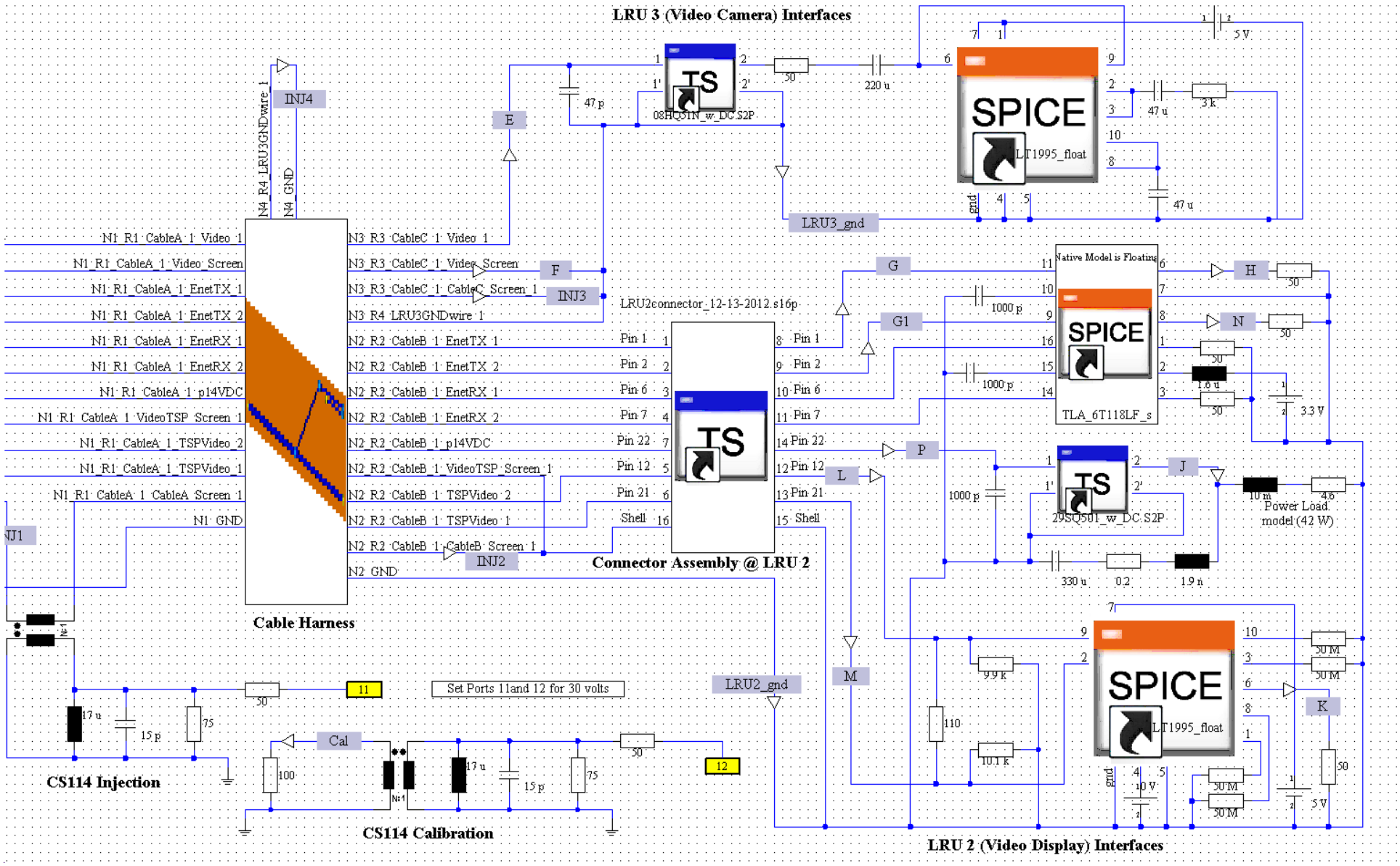

Figure 4.4.8-2. Complete System in Co-Simulation Framework for CS114 Simulation – right side schematic

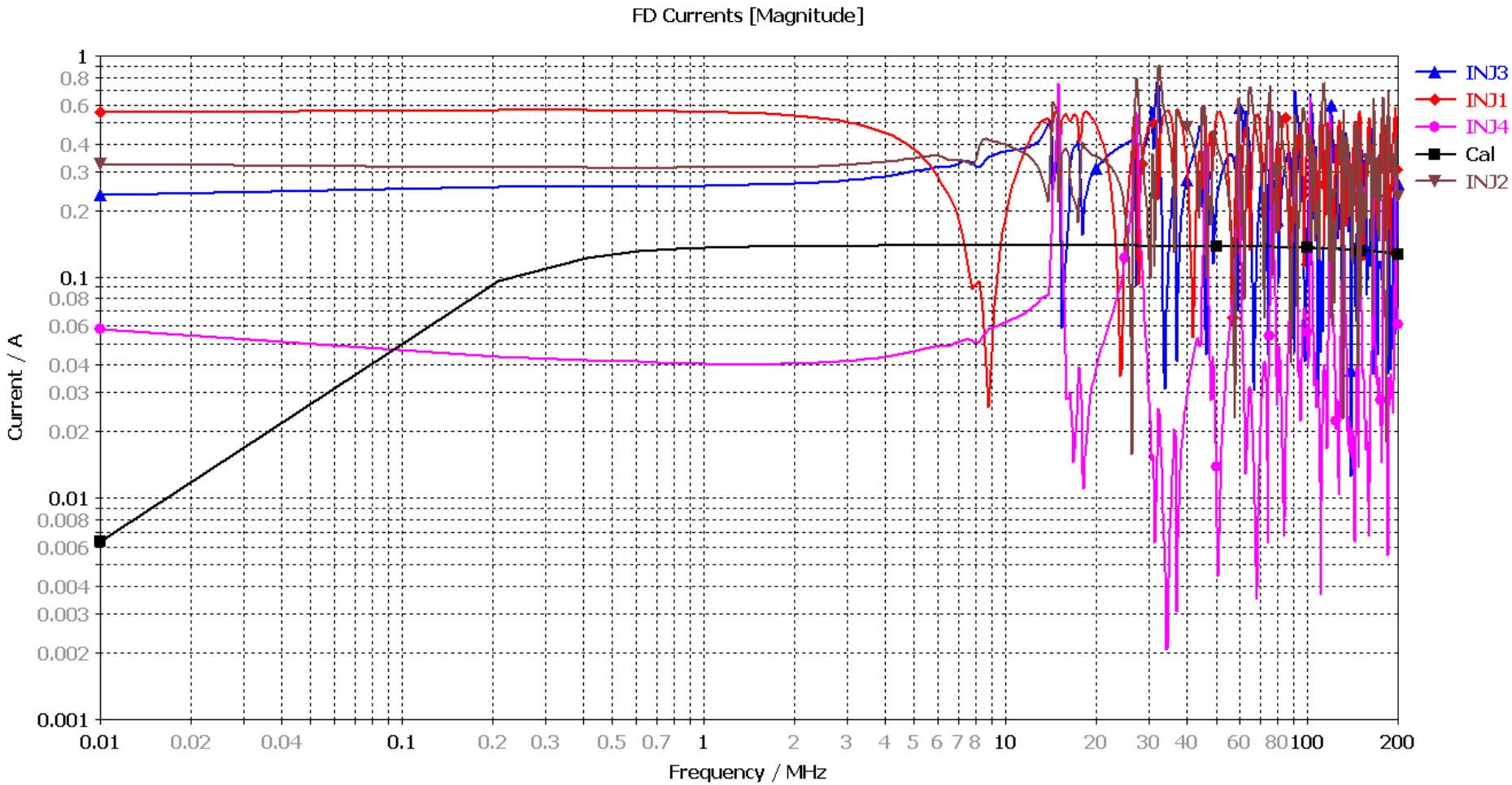

Figure 4.4.8-3. Complete CS114 Simulation – Results: Raw Calibration Current and Shield Currents

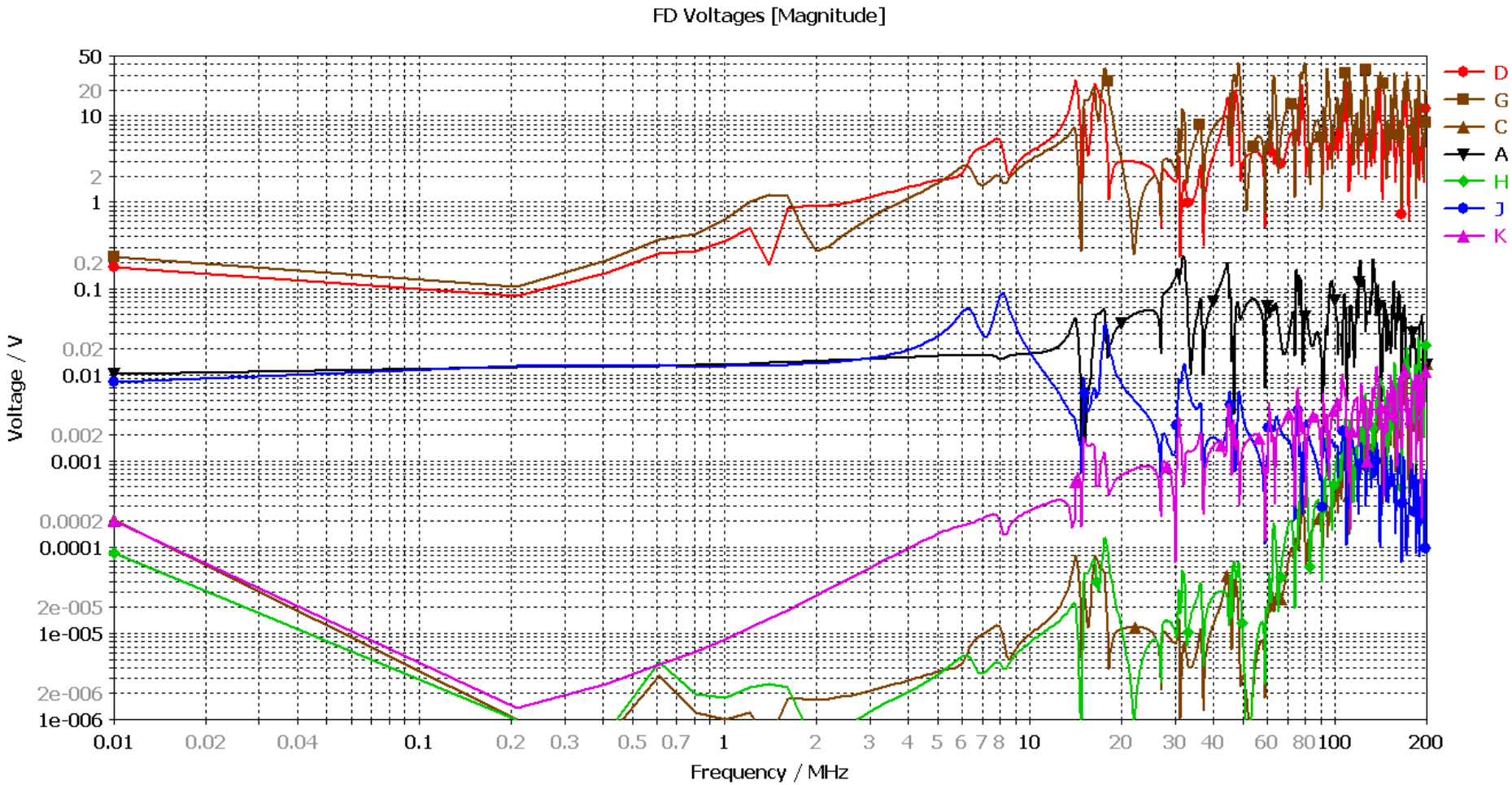

Figure 4.4.8-4. Complete CS114 Simulation – Results: Raw Interference Probe Voltages

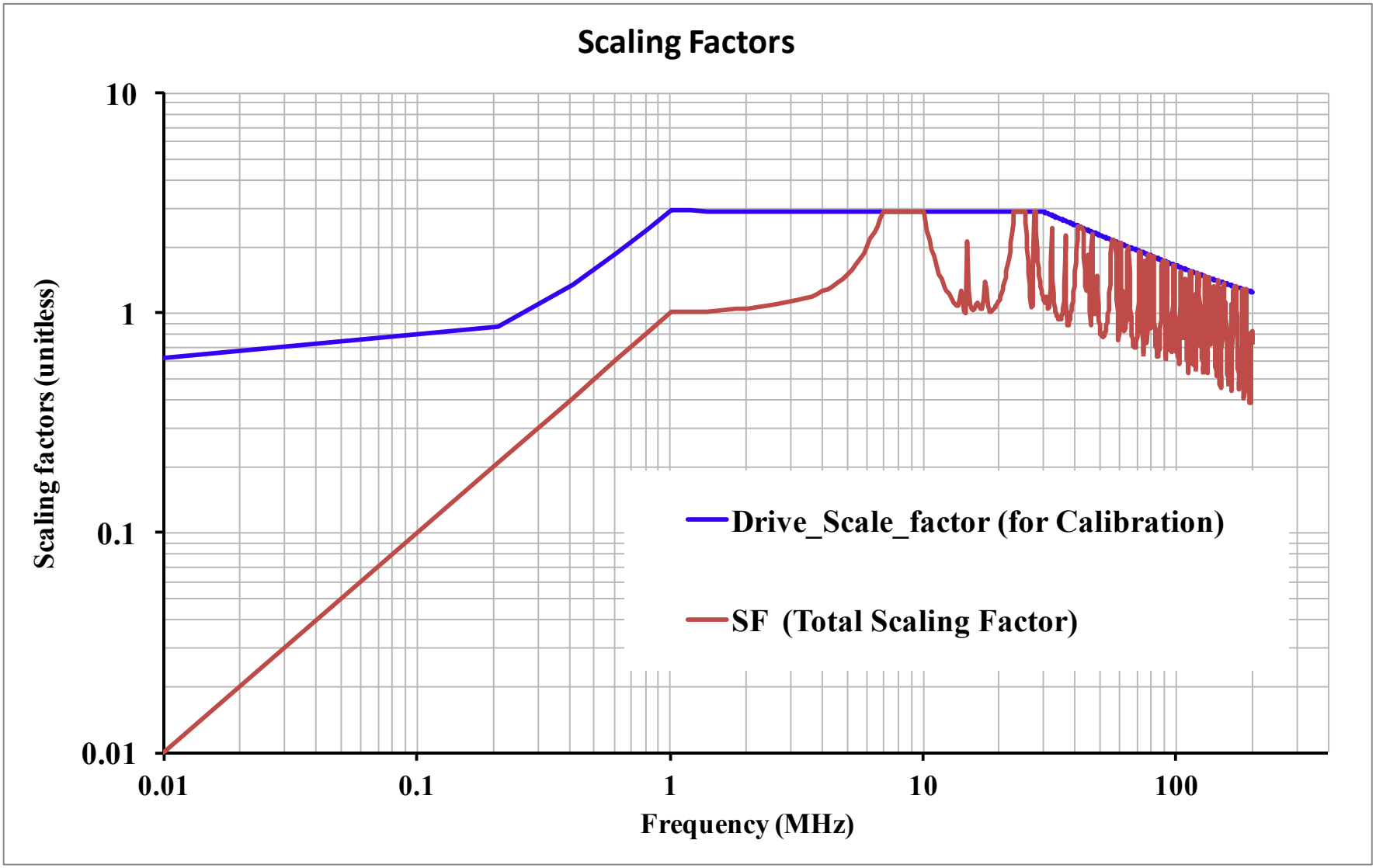

Figure 4.4.8-5. Complete CS114 Simulation – Results: Computed Scaling Factors Per MIL-STD-461F Methods

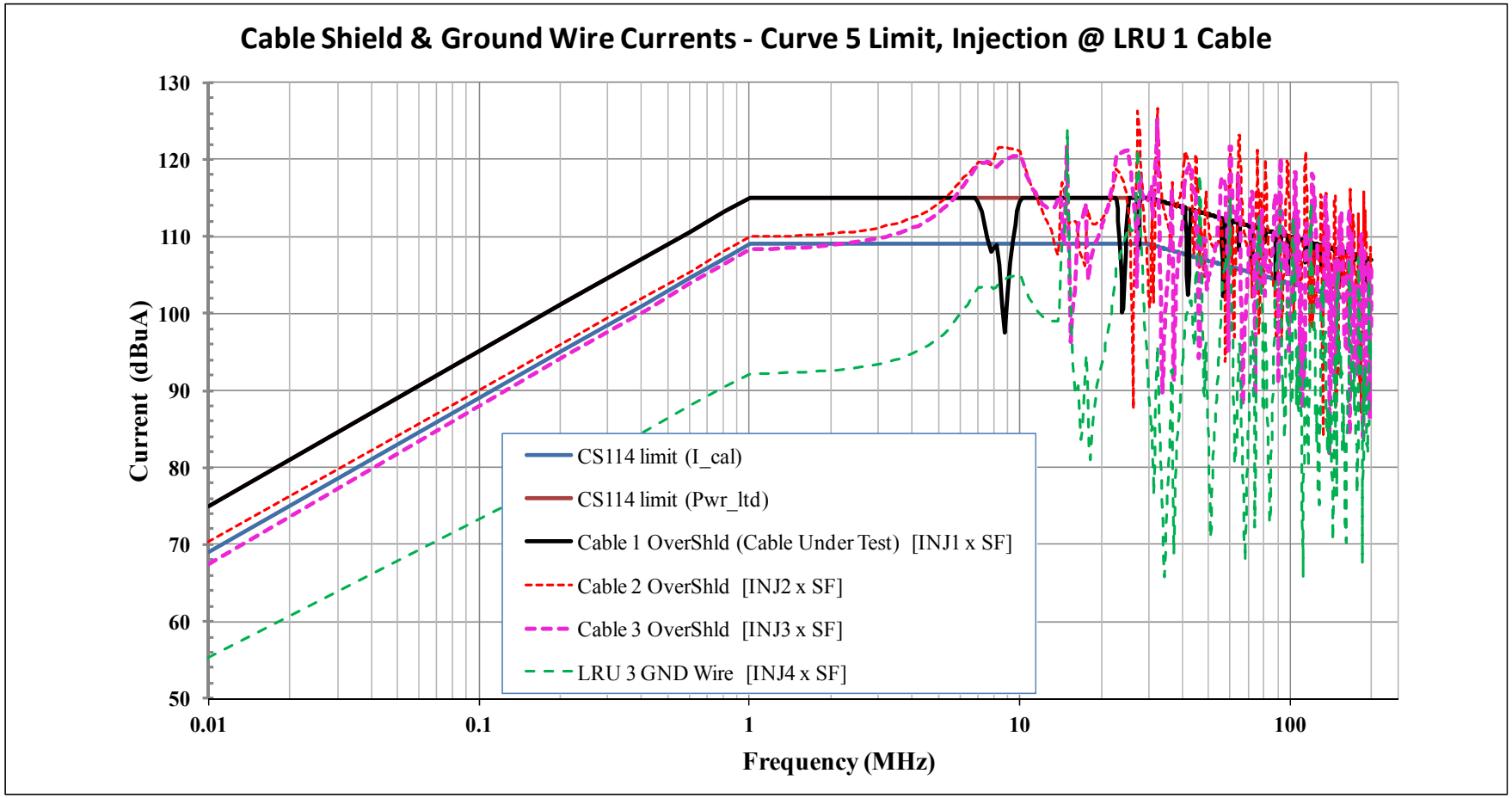

Figure 4.4.8-6. Complete CS114 Simulation – Results: Corrected Shield Currents

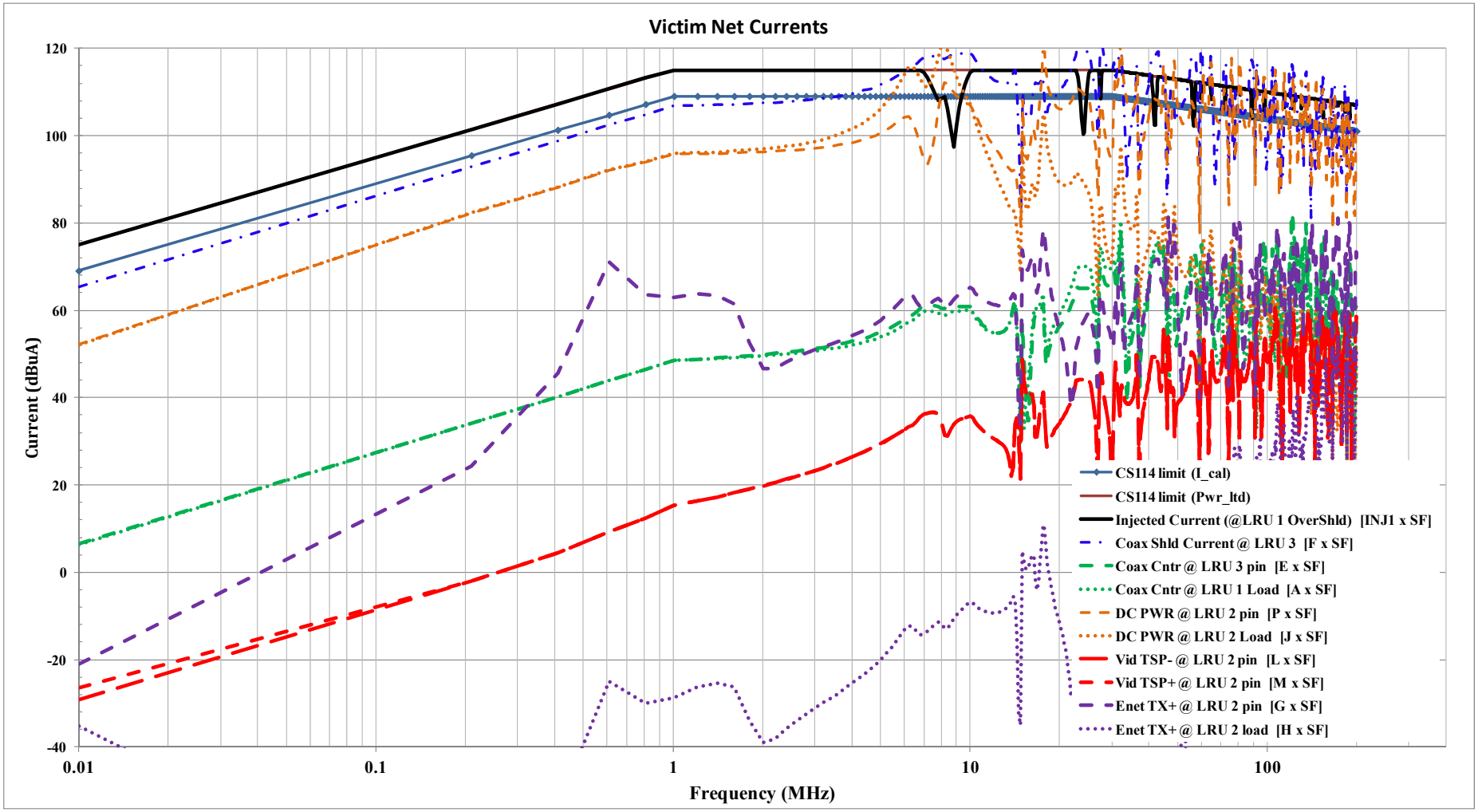

Figure 4.4.8-7. Complete CS114 Simulation – Results: Corrected Victim Net Currents

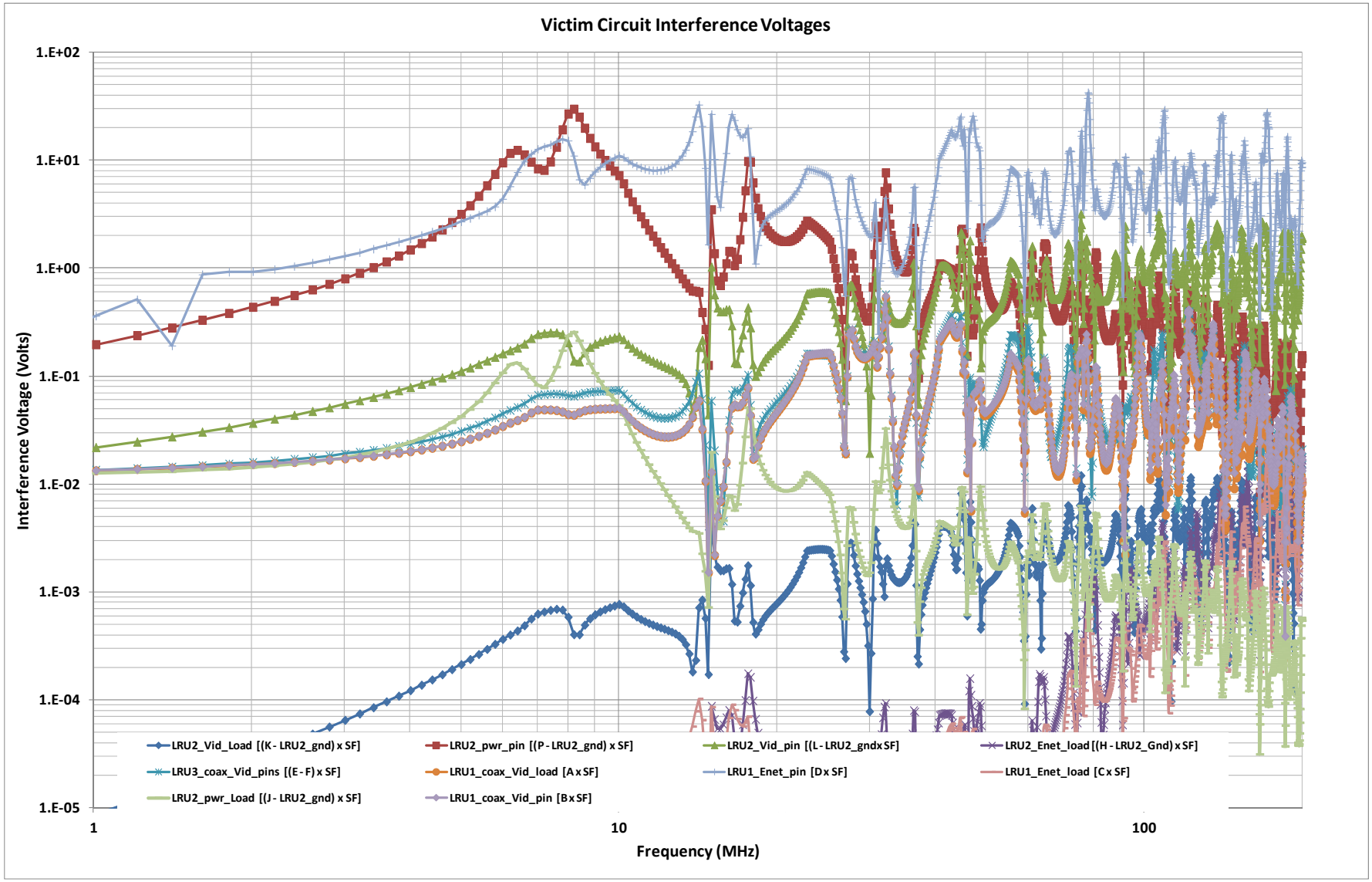

Figure 4.4.8-8. Complete CS114 Simulation – Results: Corrected Victim Circuit Interference Voltages

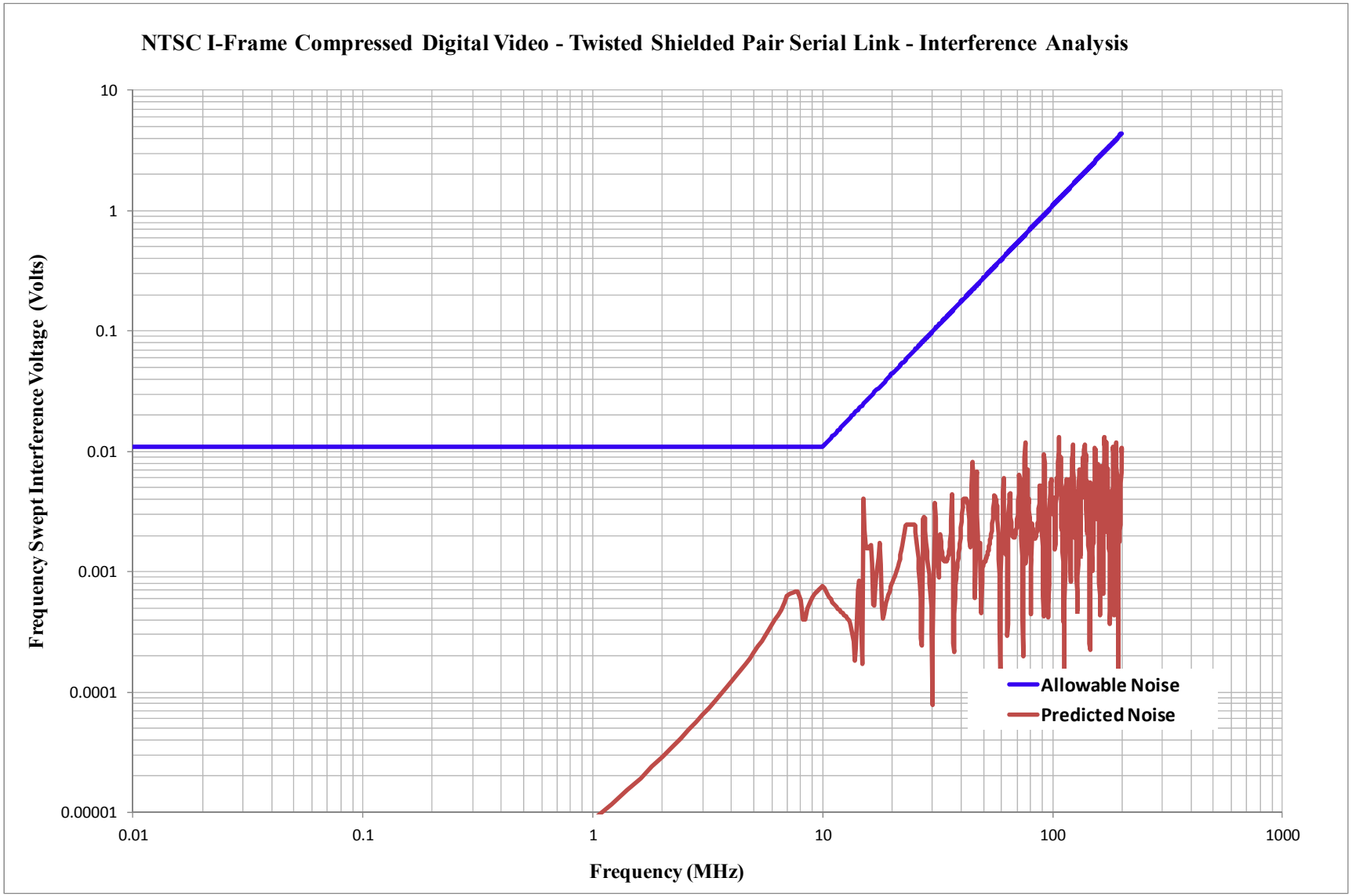

Figure 4.4.9-1. CS114 Simulation Results Analysis - Interference Prediction for Digital Video Circuit

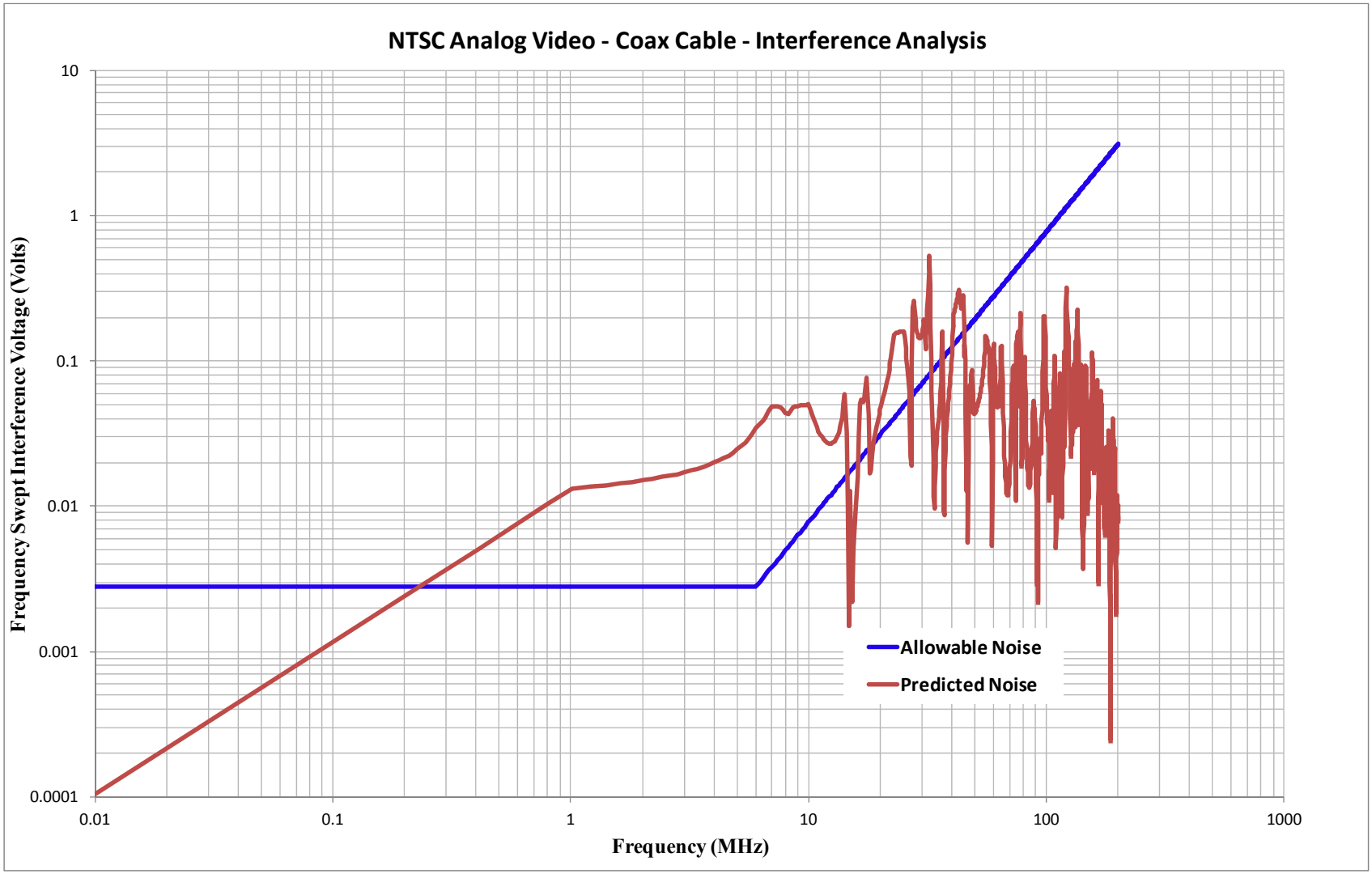

Figure 4.4.9-2. CS114 Simulation Results Analysis - Interference Prediction for Analog Video Circuit

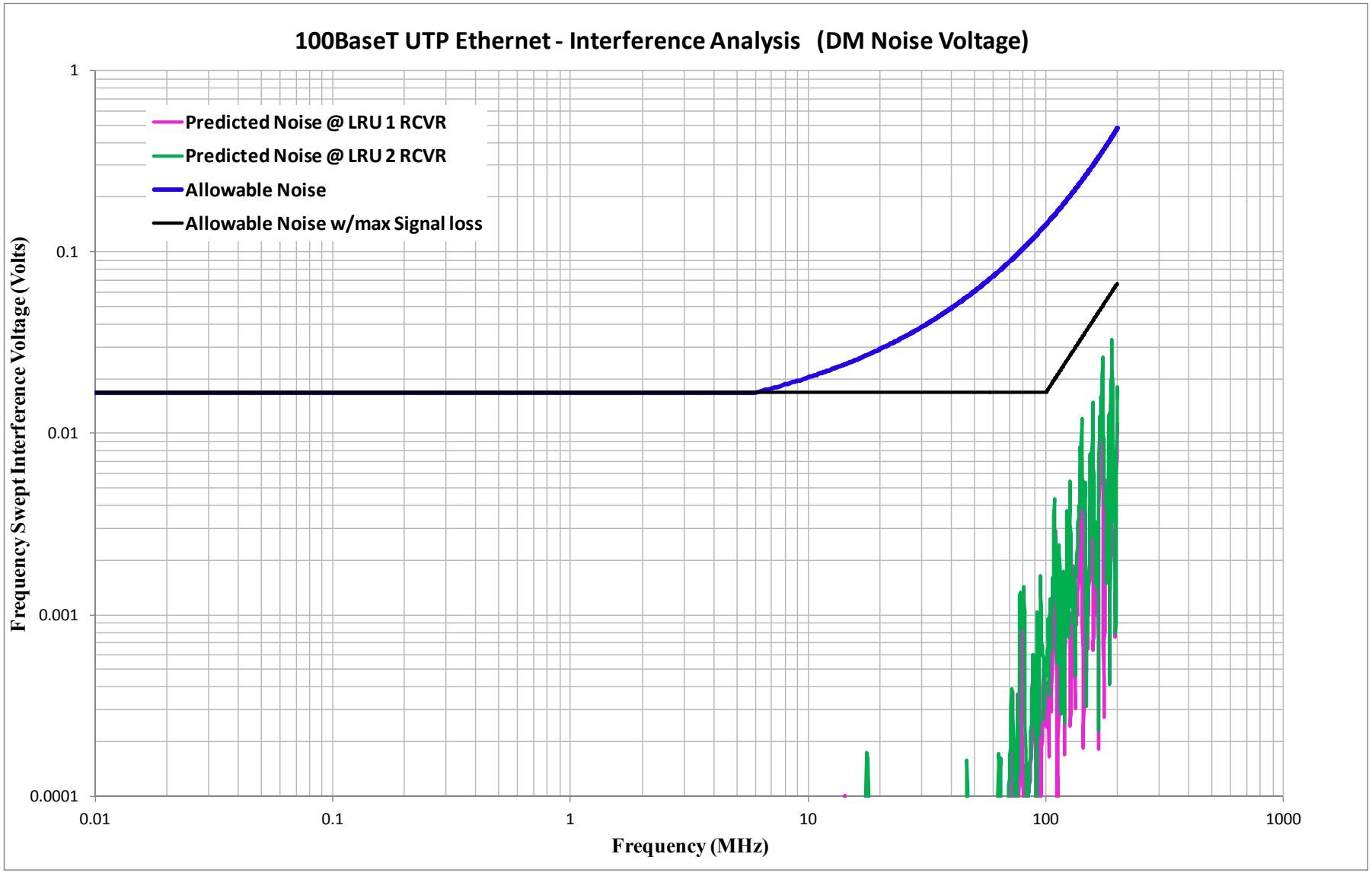

Figure 4.4.9-3. CS114 Simulation Results Analysis - Interference Prediction for Ethernet Circuits

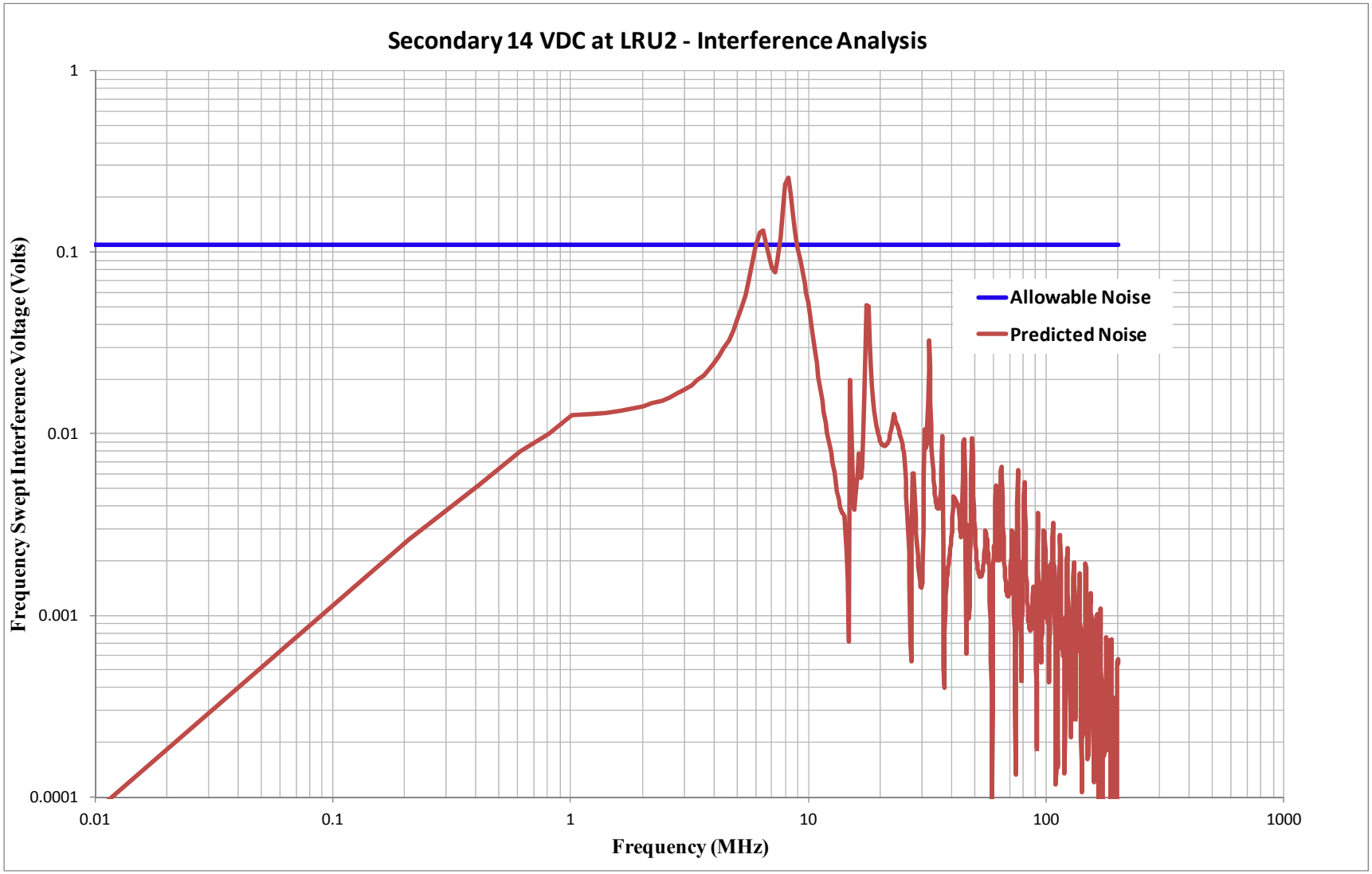

Figure 4.4.9-4. CS114 Simulation Results Analysis - Interference Prediction for Power Circuit

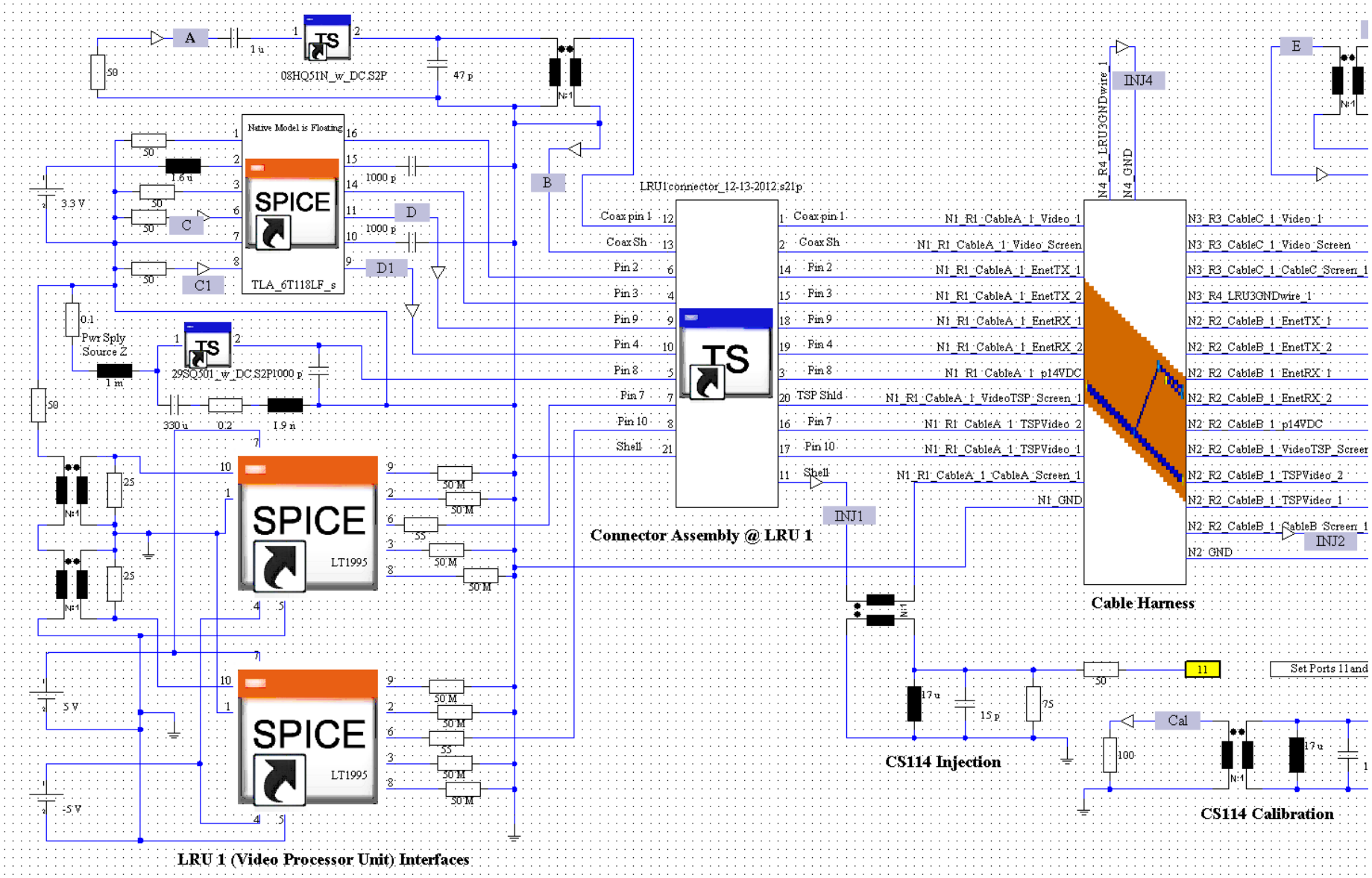

Figure 4.1.10-1. Complete System in Co-Simulation Framework for CS114 Simulation w/ EMC Improvements – left side schematic

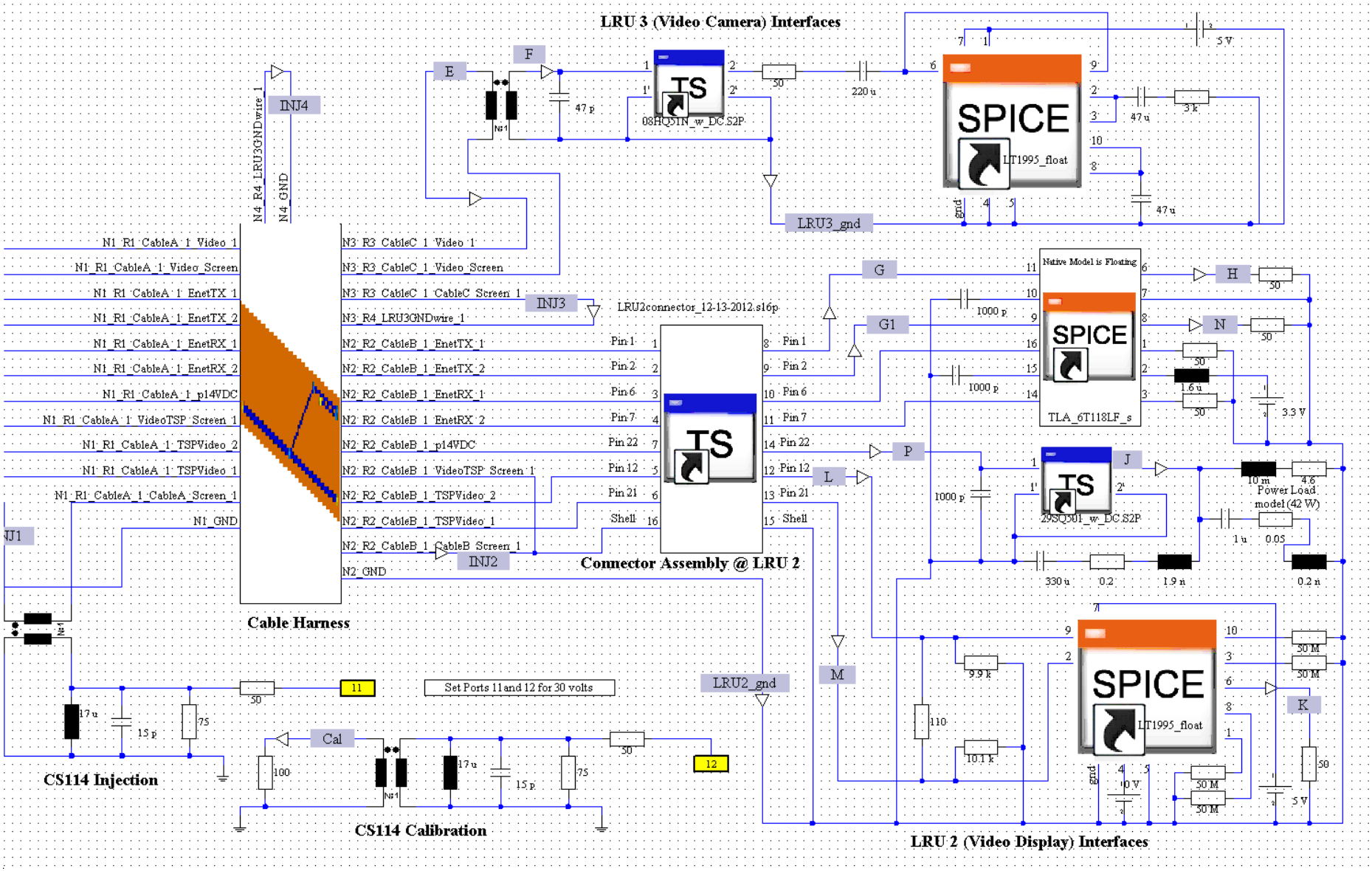

Figure 4.4.10-2. Complete System in Co-Simulation Framework for CS114 Simulation w/ EMC Improvements – right side schematic

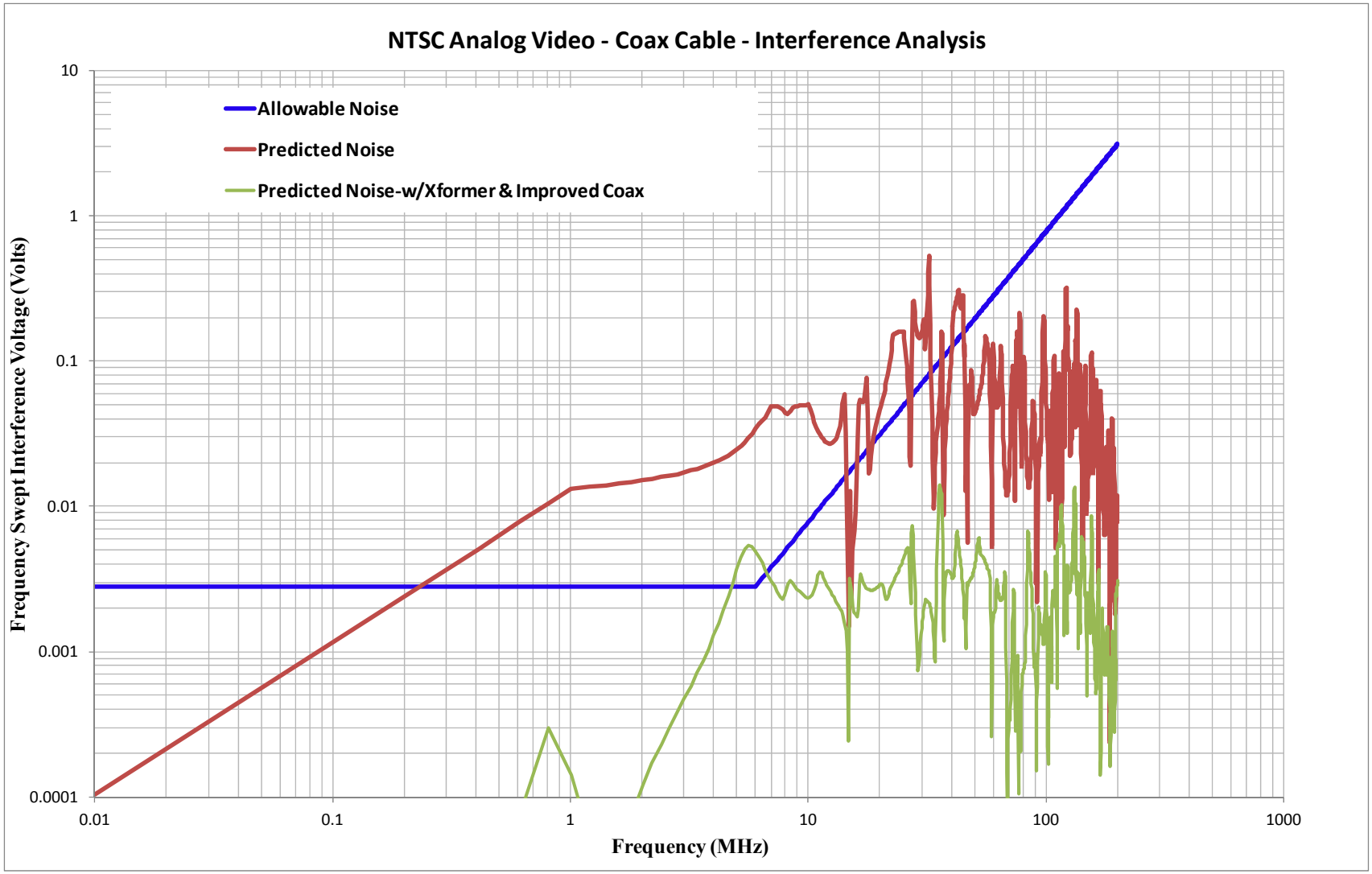

Figure 4.4.10-3. CS114 Simulation Results Analysis - Simulation w/ EMC Improvements – Analog Video Circuit

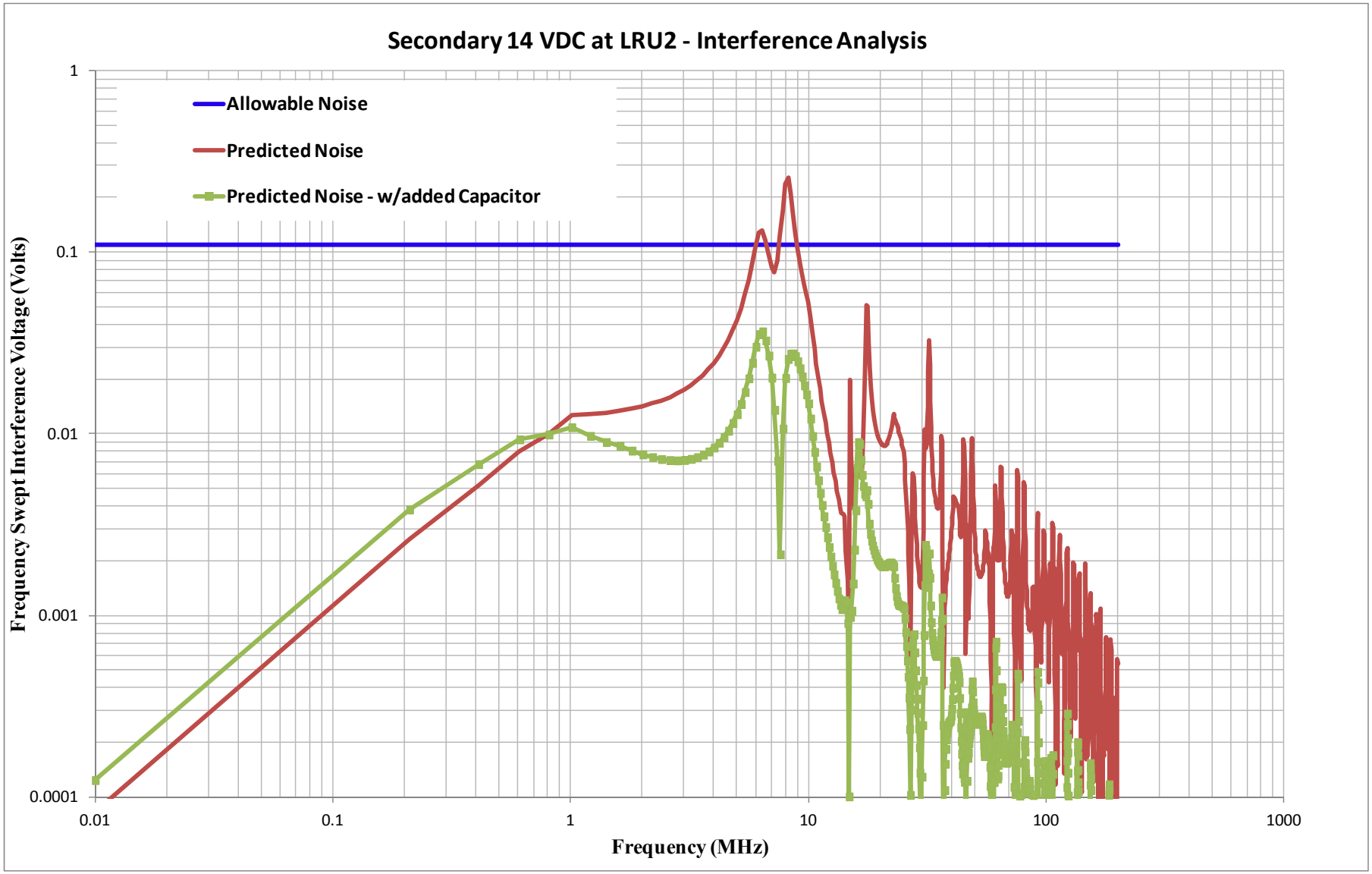

Figure 4.4.10-4. CS114 Simulation Results Analysis - Simulation w/ EMC Improvements – Power Circuit

APPENDIX A: STATEMENT OF WORK

Context Model Library – EMI Susceptibility

Electronic equipment in vehicles is subject to electromagnetic interference from sources internal and external to the vehicle via pick-up and subsequent conduction through the cables and wires attached to the equipment. This interference presents itself at the equipment connector pins as a voltage with an equivalent source impedance to result in potential upset of the interface and/or damage to electronic components if adequate protection is part of the equipment and/or cable-connector system design. The interference voltage may be a transient (typically described in the time domain), or it may be a somewhat steady-state condition at a particular frequency. The typical electromagnetic interference environments that are presented to cable-connector systems for equipment in military vehicles are defined in standards such as MIL-STD-461F[i].

This project involves the development of a set of modeling methods to allow prediction of the interference at equipment connector pins resulting from exposure of the vehicle's cable/connector system to radiated and conducted (induced) interference. Inputs to the model will be cable and connector cross-section design details, transfer impedance of the cable and connector shielding, and interface circuit design details (i.e. schematic and component characteristics or an impedance verses frequency plot). Stimuli to the model include the CS114, CS115, CS116, RS103 and RS105 environments as applied per MIL-STD-461F. Outputs from the model would include the time domain and/or frequency domain interference presented at the connector pins in terms of a voltage source and equivalent impedance for each of the input MIL-STD-461F input environments. The resulting interference levels can then be compared to the levels of the desired signals and component damage threshold levels to determine if interface failure (upset) and/or component damage is expected. Of course if unacceptable upset and/or damage are predicted, changes to the cable-connector systems design and/or the protection at the equipment interface circuits can be made to improve the probability of electromagnetic compatibility.

This effort will also include presentation of methods to determine the transfer impedance of cable shields and connectors.

The final result of this effort will be a technical report containing model topologies, methods and guidance for quantifying expected equipment immunity to the MIL-STD-461F environment with respect to interference coupling via the cable/connector system. Model template and parameters will be provided for common interfaces used on defense ground vehicles.

[i] MIL-STD-461F – *Department of Defense Interface Standard: Requirements for the Control of Electromagnetic Interference Characteristics of Subsystems and Equipment*, 10 Dec 2007.